DISCLAIMER OF WARRANTY

In accepting delivery of this modification kit, the buyer acknowledges that he has, before entering into an agreement to purchase, examined the contents and components as fully as he desires and further understands:

1) The modification kit and its individual components are being sold on an "as is" and "with all faults" basis.

2) The entire risk as to the quality and performance of the components or the machine on which they are installed is with the buyer.

3) These components were manufactured for racing and, should they prove defective following the purchase, the buyer assumes the entire cost of all necessary servicing or repair.

If you fall off your snowmobile while racing or get involved in an accident at the racetrack, consider it your own fault. Don't blame the publisher or author of this book. All recommendations on snowmobile tuning, modifications and set-up techniques are made without any guarantee on the part of the authors or Arctic Enterprises, Inc. Snowmobiles and snowmobile riders are all different . . . even machines that are supposed to be identical will display some differences and riders range from the total neophyte who has never seen track action before to the "Old Timer" that has raced so long he can't count the years. These factors, and the condition of the race courses over which your snowmobile will be ridden, are beyond our control. In view of these facts, the author and Arctic Enterprises, Inc. hereby disclaim any liability whatever arising or alleged to arise out of information contained herein.

INTRODUCTION

The 1975 Arctic Cat Competition Manual is the second racing manual published by Arctic Enterprises, Inc. to assist snowmobile racers with specifications, procedures and data on Arctic Cat racing snowmobiles. Every effort has been taken on this second volume to include as much information for the various racing classes as is possible and practical at this time.

A look at the Table of Contents will show the Manual is broken down by racing classes. This does not mean that there is no information for modified drivers in the stock class section of the book. For example, the major chapter on carburetor tuning is found in the stock section but the information included is valuable to all racers, regardless of racing class. The same is true for the chapters on traction and handling, ignition, suspension and others. You will find margin notes throughout the Manual referring you to information contained in other sections when it is applicable. Read the suggested sections completely, regardless of which section it's in, as there is new information on virtually every page of this new updated manual.

Arctic Enterprises will also be publishing an update newspaper from time to time during the season that will contain tips and new information as it becomes available. Completely fill out the return card on last page immediately to insure that you will receive the newsletters as soon as they are published.

You will notice the pages of this manual are set with an extra-wide margin next to the text material. This was done partly to allow for the references and special notes and partly to allow room for you to make notes to yourself as you are reading and preparing your racer for competition.

There is more information in this book than Arctic Enterprises has ever put together in one volume before. We hope it helps you to set up and tune your racing machine and we wish you the best of luck in the upcoming competition season.

ARCTIC CAT COMPETITION MANUAL

Published by Arctic Enterprises, Inc.

ARNIE FJELLAND
Publisher

C. JOHN RAMSTAD
Editor

EDDIE MANSUETO
Technical Editor

TOM NUMEDAHL
Production Manager

DICK NIELAND
Photographer

TABLE OF CONTENTS

THE COMPETITIVE RACER

THE MOST IMPORTANT PERFORMANCE COMPONENT IS THE RIDER

Ever wondered why some snowmobile racers seem to do a better, more consistent job of racing and winning than others? If you've been under the impression that it is because they always have the hottest sled, you're wrong.

The best, most competitive riders in snowmobile racing got where they are by paying attention to all the little details of racing, including their own physical condition and mental attitude. They have learned from experience there is a whole lot more to winning in any form of competition than just having a competitive machine.

You are reading this manual to help yourself become a faster, better-equipped and more competitive racer. Keep in mind that better than 90% of your effectiveness, and your success, will come from approaching snowmobile racing with planning, forethought and a Professional Attitude.

Snowmobile racing is a wonderful winter sport. Be a good sportsman, a responsible racer and drive with courtesy and safety. Public acceptance and satisfaction, the result of safety and sportsmanship at the racetrack, will continue to improve the snowmobile racing image and make it one of the most exciting racing activities for competitors and spactators alike.

A COMPETITIVE RACER KNOWS ALL THE RULES . . . ON THE TRACK, IN THE PITS AND ON THE ROAD

– ON THE TRACK

- Read your race association competition and safety rulebook carefully, making sure you know and understand all rules pertaining to on-track conduct at the starting line, in the turns and in case of an accident.
- Study the flagging code carefully and respond to flagging of any kind immediately.
- If you are involved in an accident on the track and cannot continue due to mechanical breakdown, remove your snowmobile from the track surface **as soon as possible.**
- Keep your hands on the controls at all times, both during the actual running of the event **and** after completion of the heat whether you receive the checkered flag or not. When the race is over, reduce speed and continue slowly around the track until waved into the winner's circle or pits by a flagman.
- If your racing snowmobile becomes inoperative during the running of an event, immediately raise your left hand and carefully steer out of traffic towards the infield if possible. Riders behind you will not always be able to see that you are rapidly slowing down, so the signal is doubly important.
- Do not drink alcoholic beverages or take drugs before or during a snowmobile event. Drinking and driving a snowmobile, especially in a racing event, can be the cause of severe injury to yourself, to others and to property.
- Practice track courtesy at all times to reduce the chance of an accident. Thoughtful and courteous racers aid in public acceptance of our sport and make it safer for everyone. Do not block or cut off other riders during a race in your efforts to win . . . you may win the race this way, but you will lose in the long run.

– IN THE PITS

- Do not "pit race". Operate your snowmobile only in areas designated by the sponsoring race committee and slow down when traveling to and from the warm-up area. Races are not won in the pits.
- Your Arctic Cat racer is designed to carry one person only. Do not exceed this seating capacity, whether competing in an event **or** trail riding.

- Do not allow new and inexperienced riders to operate the racing snowmobile until they are thoroughly instructed in the operation of the machine, the fundamentals of racing, the rules of racing and safety. Stress careful machine pre-operating inspections and safe operation.
- During engine warm-up, use a stable stand approved by the race association with the proper shield that will not allow ice, snow, cleats or ice studs to fly from the rear of the snowmobile, endangering nearby people.
- Tell bystanders to stay clear of the snowmobile while maintenance or machine adjustments are being performed.
- KEEP ALL SAFETY SHIELDS AND GUARDS IN PLACE WHENEVER THE SNOWMOBILE IS OPERATED.
- During engine warm-up and pit maintenance, do not "RACE" engine, as this can easily cause overspeeding of the drive system that cause components like clutches or belts to disintegrate.
- GASOLINE IS HIGHLY FLAMMABLE AND DANGEROUS . . . HANDLE IT CAREFULLY.

  Use a funnel to fill fuel tank to prevent spills on a hot engine or exhaust system.

  Have the proper type and amount of fire extinguishers in the pit and transport van for possible emergencies.

  Remove the fuel tank from the snowmobile before performing any welding repairs.

  DO NOT SMOKE when handling fuel. Use of a match or lighter to check fuel level is extremely dangerous.

- ON THE ROAD

- Remove all gas and solvent-soaked rags from enclosed-type trailers before loading and hauling the racing snowmobile.
- Load the racing snowmobile with a winch and make sure the machine is securely tied down before trailering.
- Check exterior lighting and license plate visibility on the trailer or van before every road trip.
- Check security of hitches, safety chains and equipment on trailer or van before every road trip.
- Know the rules and requirements for trailering in the states, provinces and localities where you will be traveling and be sure your equipment meets all legal and safety standards.

A COMPETITIVE RACER PREPARES AND EQUIPS HIMSELF FOR THE RIGORS OF RACING

As you prepare for racing, inspecting and tuning your racing snowmobile, don't forget that the most important component is YOU, the racer. Pay attention to your physical condition and make the effort required to "get into shape" during the pre-season. A fatigued rider never wins and sometimes is a danger to himself and others.

It is strongly recommended that the following protective clothing be worn at all competition events for your safety:

Knee and shin pads

Shoulder and hip pads

Kidney belt (especially for endurance racing)

Ear plugs

Approved safety helmet (1972 Z90.1, Snell or DSA D230)

Safety goggles or shield, face mask when necessary

Above ankle leather-topped boots

SAFETY DEPENDS ON THOROUGH PRE-START INSPECTIONS AND EQUIPMENT CHECKS

- Inspect all super-structures; front-end, skid frame, tunnel, clutches, track and drive components, etc. for possible cracks, broken welds, loose hardware and other damage.
- Make sure all safety guards and shields are in place and fastened securely.
- All rotating parts of the engine and drive system must have bolts and nuts tightened to correct torque value.
- All nuts and bolts in the steering system (handlebar, skis, tie rods, spindles, etc.) must be tightened to correct torque values.
- All rivets, connecting devices and hinges must be tight and in working condition.
- Speed control (throttle lever and carburetor linkage) must operate and close freely.
- The brake should be checked and adjusted to maintain approximately 3/4 inch free travel at the end of the hand lever.
- Check the hood for proper fastening and security.
- Check to see that no one is standing in front or behind the snowmobile before starting.
- Immediately after starting the snowmobile, make sure the engine will stop when the tether cord is pulled.

VICTORY IN THE STOCK ENGINE CLASSES

AVOID DISAPPOINTMENT . . . KNOW THE RULES

This section of the Arctic Cat Competition Manual is designed to assist competitors who wish to race in the STOCK classes. As rules and regulations pertaining to the legality of parts, tuning, gearing and other modifications will vary from association to association, it is impossible for Arctic Cat to guarantee that the procedures and techniques outlined in this section will be legal in every association and at every track where stock classes are run. The legality of your racing machine is **your** responsibility . . . study and know the rules for your racing class before you begin preparing your Z for competition.

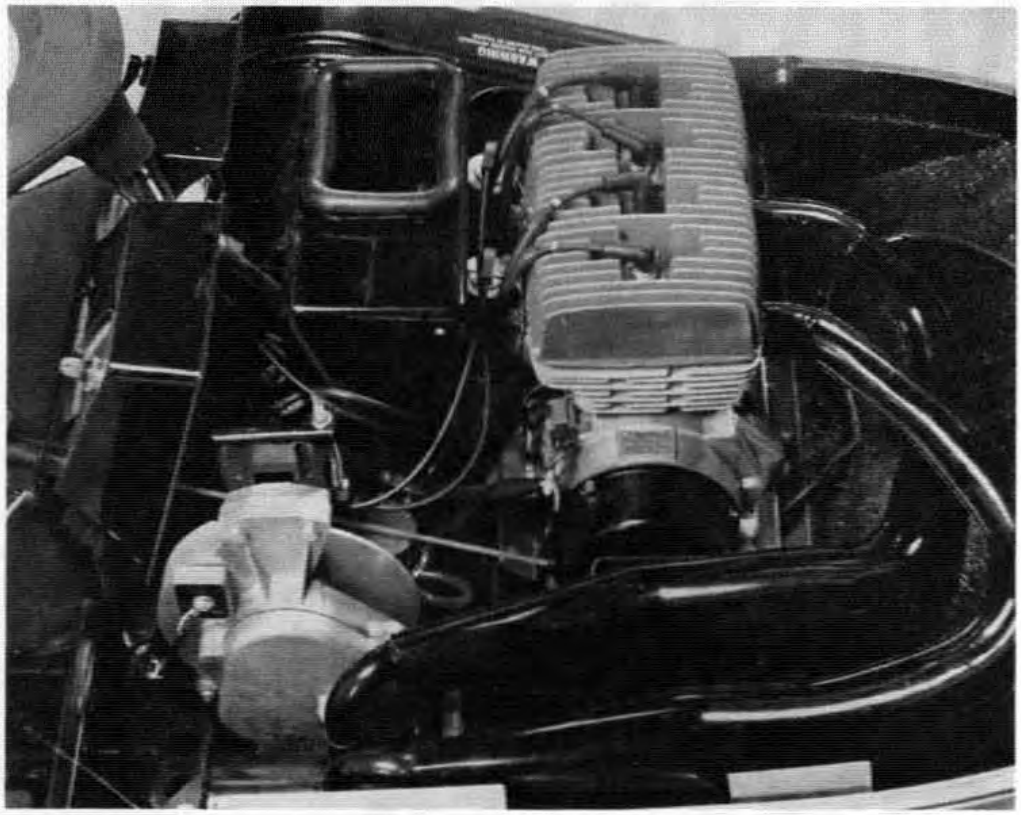

THE STOCK Z ENGINES

BREAK IT IN RIGHT FOR BETTER PERFORMANCE AND LONGER SERVICE LIFE

The new T7C "Z" engines are built to close tolerances to give you the best possible performance from a stock engine. Most stock racing rules will not allow modification of any kind to engines, so your main job as far as the engine is concerned is keeping the engine healthy and in top operating condition. The first thing to do after receiving your new Z is put 100 or more miles on it. After the racing season starts, you're going to be less inclined to want to trail ride your well-prepared racer so take some time before racing starts to thoroughly familiarize yourself with the performance characteristics and handling of the Arctic Cat Z racer.

Proper break-in is best accomplished with riding under a variety of conditions with a variety of throttle openings and load conditions. Avoid long, open-throttle runs and constant speeds. A 2-stroke engine is more likely to display problems with excessive heat, hard starting, surging and poor idling characteristics when it is new. This is because the rings, cylinder walls, crankcase seals and metal-on-metal moving parts need some time to "run-in" before everything can begin to move smoothly and seal properly. Keep a close watch on engine heat and check your spark plugs regularly. Expect some minor problems with normal operation during this break-in period, but DON'T begin performance tuning until the break-in period is over.

See "How to Read Your Spark Plugs", pages 54 - 56.

LEARN TO RECOGNIZE A HEALTHY ENGINE

After you have completed your break-in period on the Z, use a compression tester to find your normal, "stock" compression. The normal reading should be right around 150 P.S.I. with an **equal** reading in each cylinder. Compression testers are generally fairly accurate, but the exact calibration of one tester may vary up to 10 pounds from the reading given by a different tester. This is why it is especially important that you take your own compression readings and know how your engine tests with your own tester when it is near-new and healthy. Regular compression tests taken later during tuning and racing will then have much value in telling you the **general** condition of your engine. Loss of power and an indication of loss of compression on one or both cylinders can clue you to problems such as broken rings, galled cylinder walls, cracked or deformed pistons, head gasket failure and other upper cylinder problems.

The T7C "Z" engines are very carefully fabricated and assembled but this is no guarantee that each and every engine will be flawless. For this reason, the serious stock racer will pull his cylinder head and exhaust system after break-in to examine upper cylinder condition. Look for signs of galling evidenced by a series of small parallel lines that do not go the entire piston stroke. In the unlikely event the engine exhibits such signs, the piston should be removed and emery-clothed in the area of the galling indication on the cylinder wall to remove the "high spot". Carefully check the metal finish on the chamfer (the little angle on the top and bottom edges of the ports) for signs of scratching or deformation. This could be a possible indication that the ring(s) are catching slightly as they expand into the port during engine operation. This is a rare problem, but high-performance racing engines have larger port windows than "sport" engines and are therefore more inclined to "catch a ring" in the port, especially after many hours of operation have built up carbon and varnish in the ring grooves. Carefully check the combustion chamber in the cylinder head for signs of hot spots, overheating or detonation. The piston top should also be checked for these conditions. Both should exhibit a smooth, light brown finish. Hot spots will generally show a whitish deposit; tiny, almost invisible metallic balls will indicate detonation caused by hot spots, improper spark plug heat range and/or misadjusted CD ignition. The piston ring end gap can also be an important factor in proper seal and the possibility of catching a ring in a port window.

The likelihood of discovering problems on this first upper-cylinder check is extremely remote. Following this procedure is vitally important, however, as it will serve to give you a good visual example of what a healthy upper cylinder looks like. Possible problems encountered later in the season during racing or performance tuning will be easier to find and diagnose because you will have given yourself a basis for comparison.

MAINTAIN YOUR EXHAUST SYSTEM FOR TOP ENGINE PERFORMANCE

2-stroke exhaust systems like the tuned pipes fitted to your Z are designed to provide a specific curve of negative and positive pressure to aid in exhaust

scavenging and combustion chamber charging. Proper functioning of this system depends on a good, tight seal between the manifold casting and the tuned pipe and this seal must be maintained for maximum horsepower.

Remove the tuned pipes from the engine and squeeze a small amount of RTV silicone rubber (silicone seal) into the groove in the manifold castings on each cylinder before re-installing the pipes. This procedure will aid in maintaining correct exhaust pressure and will also help to seal in exhaust noise.

It is important also that the interior of the tuned pipes be kept as clean and dry as possible in order to maintain proper pressure characteristics. Remove and clean the accessible interior pipe surfaces regularly for top engine performance.

KEEP IT STOCK AND SAVE HASSLE

It is a common and often recommended practice to remove the entire engine from the machine and disassemble, checking heads, cylinders, pistons and cases for proper tolerances. If you decide on such a procedure, do not attempt to cut, file or otherwise alter any engine parts for better fit. The machine will be closely inspected by the tech people of the different race associations and discovery of any altered parts, whether they can affect performance or not, may mean disqualification. Always use a torque wrench to reassemble the engine (a wrench reading 0-25 ft-lb is best as those with larger scales will be less exact and more difficult to read in the lower range) and follow torque specifications carefully.

The winners in the stock classes will be the racers who have the healthiest, best set-up and tuned engines. Don't waste your time trying to find a "trick" that will make your engine turn out more power. The "Z" engines, in their stock form, are some of the most powerful stock-type engines Arctic Enterprises has ever built and the parts that most race associations say must be left "stock" have been carefully matched and calibrated by the factory to deliver the power you need to win in the stock classes. Spend your time learning to tune your machine to deliver the performance and handling it is capable of under the WIDE VARIETY OF CONDITIONS present in snowmobile racing . . . the ability to tune to race conditions is all the competitive advantage you will need to get into that Winner's Circle.

TREAT YOUR ENGINE RIGHT AND IT WILL DO LIKEWISE

Lubrication is vitally important during every minute of engine operation from the first break-in mile to the day the machine is finally "partsed out". Always mix your fuel carefully, mixing the proper amount of oil for the recommended 20:1 fuel/oil ratio. The best and most positive procedure for mixing is to mix the oil first with half the required gas and then add the remaining gas and shake the mixing can thoroughly. Arctic engineers recommend using Premium fuel in all racing applications. It is also important, especially in cold weather, to shake your fuel can thoroughly just

before fueling your machine. Mixed fuel left standing in the cold for any length of time can sometimes get "unmixed", the lubrication components settling to the bottom of the can leaving no lubrication in most of the gas.

STOCK Z 1975 ENGINE SPECIFICATIONS

Engine	T7C 250 FR2	T7C 340 FR2	T7C 440 FR2
No. of Cylinders	2	2	2
Displacement (cc)	245	339	436
Cylinder Head Volume (cc)	9.5	13.2	18.5
Cylinder Head Squish Angle	13°	9°	8°
Compression (PSI)	140 - 150	140 - 150	140 - 150
Compression Ratio	8 - 8	8 - 4	7 - 1
Bore (mm)	51	60	68
Stroke (mm)	60	60	60
Piston Type	Two Rings Top L Ring w/o Boosterport	Two Rings Top L Ring w/o Boosterport	Two Rings Top L Ring w/o Boosterport
Piston Ring 1 Side Play 2	.002" to .005" .002" to .004"	.002" to .005" .002" to .004"	.002" to .005" .002" to .005"
Piston Ring End Gap	.006" to .014"	.006" to .014"	.012" to .019"
Piston Skirt Clearance	.0026" to .0041"	.0030" to .0045"	.0033" to .0049"
Ignition Type	Dual Std. - CDI	Dual Std. - CDI	Dual Std. - CDI
BTDC @ 6000 RPM Ignition Timing	14°	14°	17°
Spark Plug	NGK B9 EVA or Equivalent	NGK B9 EVA or Equivalent	NGK B9 EVA or Equivalent
Spark Plug Gap	.16" or As Stated	.16" or As Stated	.16" or As Stated
Cylinder Head and Crankcase Torque	20 Ft/Lb	20 Ft/Lb	20 Ft/Lb
Fuel Mixture Ratio	20 - 1 (90 Octane Min.)	20 - 1 (90 Octane Min.)	20 - 1 (90 Octane Min.)

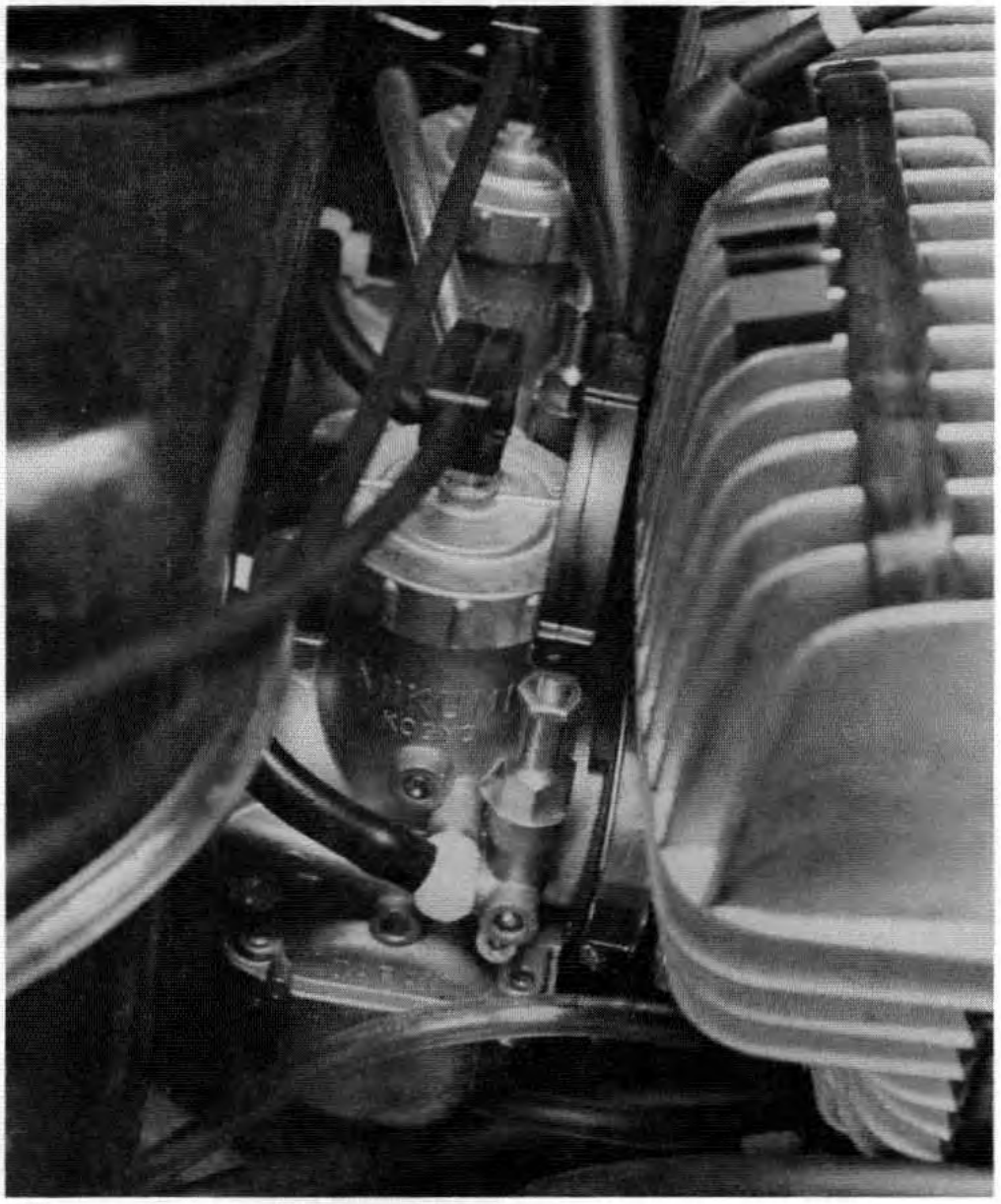

THE VARIABLE VENTURI MIKUNI CARBURETOR

CARBURETION IS THE MAIN ENGINE TUNING ELEMENT IN THE STOCK RACING CLASSES . . . KNOW YOUR CARBURETORS

Most Stock Class racing rules in effect this season will not allow modifications to any engine parts. These rules include carburetors. Obtaining maximum performance from the Mikuni carburetors fitted to your Z does not require modification but simply careful and intelligent tuning to meet the particular conditions present at race time. The racer who takes the time and effort to learn his carburetion – how it works and what conditions affect carb performance – will be ahead of the game when the flag falls. This section contains theory, specifications and proper tuning procedures designed to help you obtain optimum state-of-tune under the varying conditions of racing. It is strongly recommended that you remove a carburetor from your machine to use as visual reference while you study this

section. Then when you get down to actual tuning, you will be thoroughly familiar with the names, locations and functions of the various component parts.

THE 1975 Z CARBURETOR IS DESIGNED SPECIFICALLY FOR USE WITH THE AIR SILENCER BOX . . . REMOVAL OF THE SILENCER COULD RUIN YOUR ENGINE!

The carburetors fitted to the 1975 Z models differ in important areas from the carburetors installed on earlier El Tigres. The installation for 1975 of the Air Silencer Box created a pressure differential in the intake area that caused excessive fuel to flow through the carburetor and into the engine under acceleration and under part-throttle operation. To correct this problem, the float bowl vent has been moved from the external location on previous VM series carburetors fitted to Arctic racers to a location in the bore of the carburetor. This has the effect of equalizing pressure in the carburetor bowl.

CAUTION: **If the Air Silencer Box is removed from the carburetor, the change in pressure in the intake will create a RICH MIXTURE that could likely result in severe engine damage. The Air Silencer Box has no effect on performance characteristics and it must be secured to the carburetor during carb tuning and adjustment and it must always be in place when the engine is operated. Examine the Silencer regularly for cleanliness and freedom from obstruction.**

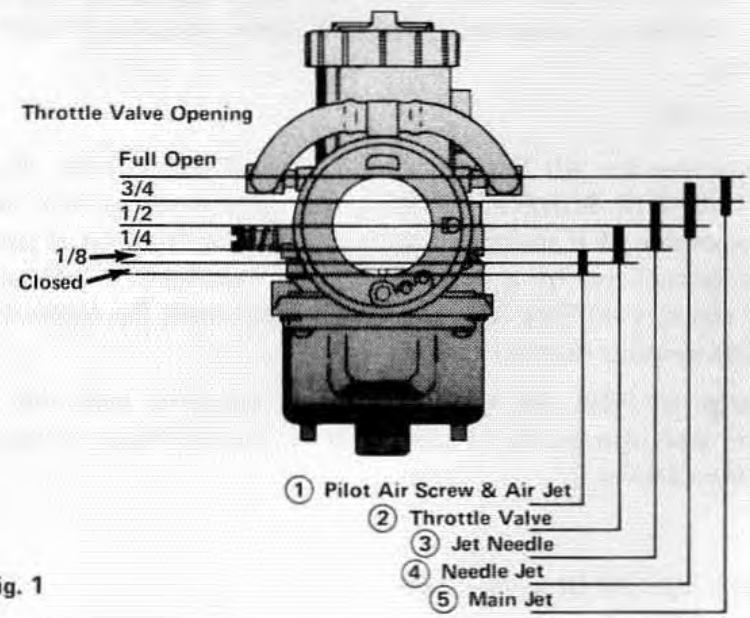

Fig. 1

MIKUNI CARBURETOR THEORY: 5 OVERLAPPING FUEL SYSTEMS THAT FUNCTION ACCORDING TO THROTTLE OPENING

In Mikuni VM-type carburetors, different fuel mixing components function according to throttle opening (position of throttle slide) and each system is tuned accordingly. Fig. 1 illustrates the 5 systems and their range of effectiveness as the throttle slide moves from closed to full-open position.

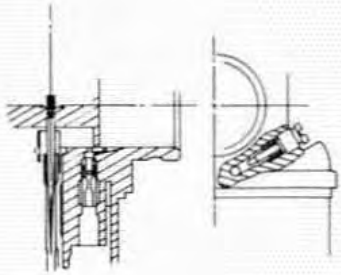

Pilot jet works from closed to 1/4 throttle.

① PILOT JET AND PILOT AIR SCREW

Pilot Jets available from Arctic Enterprises range from no. 20 (leanest) to no. 40 (richest) in increments of 5. The Pilot Air Screw is an adjustable metering device that meters air mixing with fuel from the Pilot Jet. Normal tuning start procedure calls for the Pilot Air Screw to be opened one (1) full turn from the closed position.

Tuning Procedure: Presence of a Smooth Idle Does Not Necessarily Mean the Idle System is Tuned!

Before beginning this Pilot system tuning procedure, make sure the throttle slide is resting against the idle adjusting screw when the throttle is closed. This can be checked visually by looking through carburetor bore.

- Raise the back of the snowmobile with a Quik-Jak. Start engine and allow time for a complete warm-up.
- Slowly turn the Idle Adjusting Screw clockwise until a point is reached where RPM increases to 300-500 RPM higher than your chosen idle speed.
- Turn the Air Screw in or out in 1/4 to 1/2-turn increments until engine RPM reaches its maximum. Clockwise rotation enriches the fuel/air mixture, counterclockwise rotation leans the fuel/air mixture.
- Turn the Idle Adjusting Screw counterclockwise to obtain the lower speed for idling and repeat adjustment of Air Screw, turning it in or out in 1/4 to 1/2-turn increments until maximum engine speed is obtained. If engine speed increases more than you want for idling, lower RPM with Idle Adjusting Screw and repeat Air Screw adjustment until idle is satisfactory.
- Turn engine off.
- Carefully screw the Air Screw in until it stops (CAUTION: DO NOT FORCE THE AIR SCREW) counting the number of turns it takes to close completely. If it takes one turn or less, the Pilot Jet is too small and must be replaced by a larger one (larger number). If it takes 2-1/2 turns or more, the Pilot Jet is too large and must be replaced by a smaller one (smaller number).
- If a change of Pilot Jet is found to be necessary from the above procedure, start the tuning procedure from the beginning to obtain the proper state-of-tune.

See page 23 for pilot jets available.

PILOT JET/AIR SCREW DIAGNOSIS:

Smooth, even idle is not your best indication of proper Pilot tuning. If the jetting is too lean, engine speed will not pick up smoothly, especially at small throttle openings. If exhaust smoke is heavy and exhaust sound is dull at small throttle openings, the Pilot is too rich. The first 10-15% of throttle response is determined in part by the Pilot Jet and Air Screw setting . . . tune it carefully.

② THROTTLE SLIDE CUTAWAY

The amount of throttle slide cutaway affects the fuel/air mixture from idle to 1/4 throttle. Slides available from Arctic Enterprises are listed by carburetor size (mm) and by numbers stamped on the slide (1.5, 2.0, 2.5, 3.0, etc.) that indicate the degree of cutaway on the slide bottom. The cutaway also controls the point at which the main fuel system takes over from the Pilot idle system. **Larger** slide numbers indicate a **greater** cutaway and a **leaner** mixture.

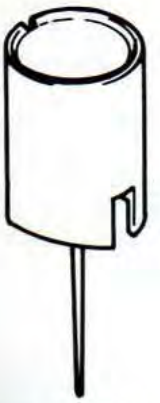

The cutaway works from idle to 1/4 throttle.

Tuning Procedure: Watch for Clean Part-Throttle Acceleration

- Start the engine and allow time for a complete warm-up.
- Accelerate from a stop at 1/4 throttle setting. If the engine hesitates, or spit-back occurs, a lean condition exists due to a too-large throttle cutaway. Correct in the direction of smaller-numbered throttle slide.
- If the engine drags or four-cycles when accelerating under a 1/4 throttle, a rich condition exists due to a too-small throttle cutaway. If this condition is experienced, turn the Pilot Air Screw out one full turn (but never more than 3 turns total). If this does not correct the problem, go to a larger (larger number) throttle slide.

See page 24 for throttle slides available.

THROTTLE SLIDE DIAGNOSIS:

Clean acceleration at approximately 1/4 throttle indicates a smooth transition from the idle system to the main fuel system. If the Pilot Air Screw has a significant detectable effect on this performance test, the cutaway is wrong.

③ JET NEEDLE SIZE AND POSITION

The size and position of the Jet Needle affects the fuel/air mixture from approximately 1/4 to 3/4 throttle. Jet needles available from Arctic Enterprises use a four-figure code (like 5DP7) to indicate mixture characteristics:

FIRST NUMBER – Designates the total length of the needle, the larger the number the longer the needle. The 5 indicates a needle at least 50mm long, but not as long as 60mm.

LETTERS – The letters in the middle of the four-figure code indicate the taper of the needle. The first letter indicates the taper on the upper part of the needle, the second letter indicates taper on the lower part of the needle. For example, the letter "A" equals 0°15", the letter "G" equals 1°45" and so on. Later letters indicate more taper and richer fuel flow. The upper taper is effective in the lower part of the needle's range (1/4 to 3/4 throttle) and the lower taper is effective at the top of the needle's operating range. Watch it happen on the carburetor itself and you'll never forget – the main fuel source for the carb is the jet into which the needle drops.

SECOND NUMBER – Refers only to manufacturer lot number and is not a tuning factor.

The jet needle works from 1/4 to 3/4 throttle.

See page 24 for jet needles available.

Tuning Procedure: The Needle Works on a Combination of POSITION and TAPER

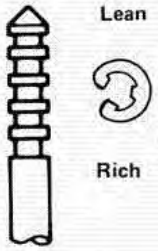

The jet needle works from 1/4 to 3/4 throttle.

—POSITION: On the top of the needle (see illustration) is a small e-clip that determines the position of the needle in the throttle assembly. Moving the e-clip to a higher notch lowers the needle in the jet and leans the mixture. If evidence of rich mixture is encountered the clip is therefore moved to a higher notch, if a lean mixture exists the clip is moved down. Needle position should be your first check for mixture problems in the 1/4 to 3/4 throttle range. In the case when you "run out of notches" either on the top or bottom when you are tuning for mid-range, a needle of different length and/or taper or a different needle jet is indicated.

—TAPER: The effect of the taper will be felt mostly near the 3/4 throttle side of the needle's effective range. This is where the transition between needle jet and main jet takes place and it is controlled by the sharp taper at the tip of the needle. Lean mixtures are evidenced by engine heating and hesitation at near-open throttle, rich mixtures are usually evidenced by a lack of difference between near-open and open and backfire under load.

JET NEEDLE DIAGNOSIS:

Adjustments to the Jet Needle have approximately a 10% effect on main jetting. Changes in main jetting will also have a 10% effect on the needle jetting. Most mid-range fine tuning will take the form of changes in the position of the needle and a tuner's ability to identify rich and lean mixtures and adjust accordingly, along with experience in the effects of these adjustments, will make mid-range tuning a step-by-step, change-and-test procedure.

See page 24 for needle jets available.

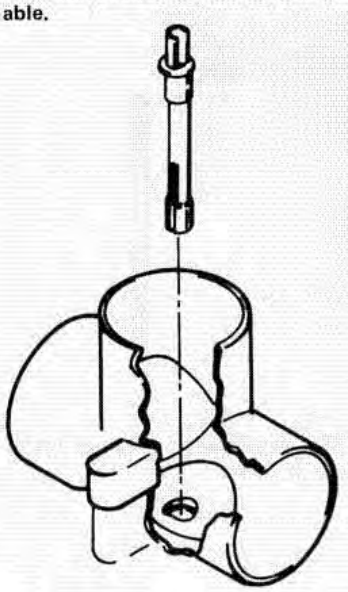

The needle jet works from just above 1/4 throttle to just below wide-open throttle.

④ NEEDLE JET

The needle Jet is available from Arctic Enterprises in various sizes and it works in conjunction with the Jet Needle. Because the Needle Jet orifice remains constant throughout the length of the jet, changing the jet will have a greater effect on mid-range performance than a change in position of the needle. Needle Jets available from Arctic Enterprises are coded with a letter and a number stamped into the jet, such as N3 or O2 that indicates size of orifice:

LETTER designates the orifice size with earlier letters like "N" being smaller (and leaner) than a jet marked "O".

NUMBER designates the **specific** diameter of the jet with number 1 the leanest and 9 the richest.

Tuning Procedure: The Needle and the Jet Work Together to Meter Fuel for Mid-Range Operation

— Needle Jet tuning comes into play when adjusting the position of the needle itself is unsatisfactory. For example, if you are experiencing a rich condition with the e-clip on the needle in the top notch, a smaller orifice (earlier letter or lower number) in the Needle Jet will reduce

overall fuel flow through the system and provide leaner tuning in each position with the same needle in place. A lean condition with the e-clip in the bottom notch indicates a need for a change to a larger jet (later letter and/or lower number).

- There will almost never be a need for changing the needle jet in stock applications. Your stock engine is accurately calibrated to respond to mid-range tuning of the needle alone. In the case of modified engines, changes in needle jetting is more likely and machine performance should be tested carefully to determine if mid-range performance can be improved by needle jet changes. Aim for the needle and jet combination that gives you the greatest effective mixture change when tuning with the needle only.

NEEDLE JET DIAGNOSIS:

Check the orifice of the Needle Jet regularly for possible blockage or plugging. Loss of power at 1/2 to 3/4 throttle or an impossible-to-tune lean condition when throttle is wide-open can be indications of a dirty or mismatched Needle Jet.

See jets available, page 23.

(5) MAIN JET

The Main Jet affects fuel mixture from 3/4 throttle to wide-open. Main Jets available from Arctic Enterprises are coded in graduated steps of 10 starting at 150 and going through 680. The smaller numbers are smallest (leanest) for use in the smaller (mm) carburetors and the orifice size increases with the number. Normal tuning procedure requires a selection of Main Jets available for change-and-test procedure.

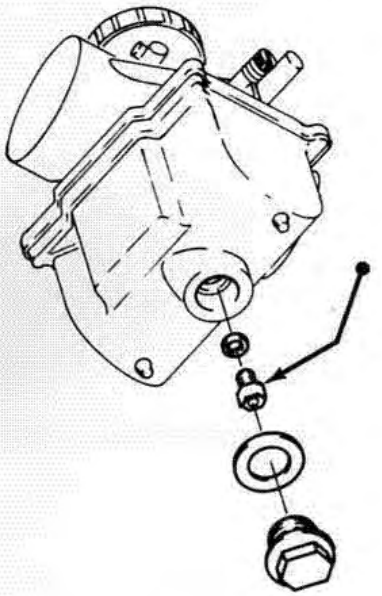

The main jet determines wide-open throttle performance.

Tuning Procedure: Select the Main Jet for Optimum Wide-Open Performance

- Start engine and allow time for a complete warm-up.
- Run the snowmobile on a flat, hard-packed surface at full throttle. If the engine fails to pull full RPMs or labors at full throttle, the Main Jet is too large (rich). Install the next lowest available jet size and repeat full throttle test. Continue to change jetting one size at a time until engine runs efficiently at full-open throttle. Check the condition of the spark plug after each run to determine mixture.
- If the engine seems to run efficiently at full throttle from the start of the tuning procedure, the Main Jet should still be checked for proper size as follows: Install a Main Jet two sizes larger and run the machine as above to test for a rich condition. If rich condition is noted, change to next lowest Main Jet size and test for improvement. A too-lean Main Jet can burn your engine, so be sure it's right. Check spark plugs after each run for proper mixture indications.

MAIN JET DIAGNOSIS:

If the Main Jet is just slightly lean, the engine will run better when cool and lose power as it heats up. If the Main Jet is slightly rich, the engine will miss and lose power rapidly under loaded conditions. The Main Jet is the first fuel system to pick up dirt and foreign matter — keep your gas clean and watch for sudden lean conditions evidenced by rapid engine heating and/or momentary full throttle seizing. Remember that changes in Main Jet tuning will have a 10% effect on the state-of-tune of the Needle Jet system and adjustments may have to be made to the Needle position after changes in Main Jetting.

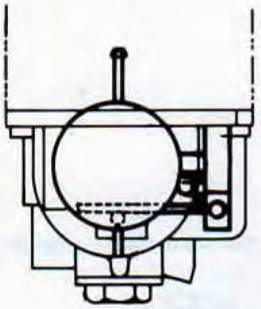

FLOAT LEVEL: Proper Carburetor Performance Depends on Accurate Float Level

The fuel level in the float chamber is controlled by the float arms and the needle valve actuating tab. Check this system regularly for proper operation.

- Remove the float chamber body and gasket from the main carburetor body and invert the carburetor to measure for proper float arm height.
- With the carburetor inverted, measure the distance from the gasket surface to the top edge of the float arm. When an adjustment is necessary, bend only the little tab that actuates the needle valve, NOT the float arms. See Chart for proper distance for your carburetors.

FLOAT CHAMBER DIAGNOSIS:

See page 23 for inlet seats available.

Improper float level will make performance tuning of your carburetor impossible. If the level is too high, hard-starting, flooding and generally rich mixture indications are the usual result. If the level is too low, the carburetor will starve the engine at any throttle opening above idle. Problems can also come from a worn or dirty needle valve that won't close completely or sticks closed. If you suspect problems in the float chamber but the float arm distance is right, replace the needle valve immediately.

FLOAT ARM TO CARBURETOR BODY SURFACE SPECIFICATIONS

Model	VM 28	VM 30	VM 32	VM 34	VM 36	VM 38
Height						
(Inch)	.59 - .66	.86 - .94	.86 - .94	.86 - .94	.66 - .74	.66 - .74
(mm)	15 - 17	22 - 24	22 - 24	22 - 24	18 - 19	17 - 19

RICH AND LEAN MIXTURES: The Ability to Identify a Rich or Lean Mixture is Your Most Important Tuning Tool

- When the fuel mixture is too lean, the following conditions may be present – separately or together:
  - The engine heats rapidly and overheating is common under load.
  - The improper condition improves when the choke is engaged.
  - Acceleration is slow and/or flat spots are noted.
  - The spark plug is pale and/or the electrodes burn away.
  - The RPM of the engine fluctuates under constant throttle.
  - A general lack of normal power is evident.
  - The metal-to-metal sound of a tight piston is noted.
- When the fuel mixture is too rich, the following conditions may be present – separately or together:
  - The exhaust sound is dull or muted and intermittent.
  - The improper condition worsens when the choke is engaged.
  - The improper condition becomes more apparent as the engine heats up.
  - Exhaust is heavy and more visible as the throttle is advanced.
  - Spark plug fouling is experienced.
  - Engine misses under loaded conditions.

MIXTURE DIAGNOSIS:

There is no substitute for experience in recognizing and correcting mixture problems in your carburetors. Don't wait for the various problems outlined in this chapter to happen before you learn how to identify and correct them. The winning racer will learn his carburetor tuning completely and will practice the procedures necessary for correcting improper mixtures until he can do them quickly . . . remember, your most critical tuning might well be done **between heats!**

STOCK EL TIGRE AND EL TIGRE Z FACTORY EQUIPPED CARBURETOR SPECIFICATIONS

ENGINE MODEL	T7C 340 FR1	T7C 440 FR1	T7C 250 FR2	T7C 340 FR2	T7C 440 FR2
Carb Setting No.	VM32-85 P/N 0170-073	VM34-63 P/N 0170-072	VM28-132 P/N 0170-076	VM36-22 P/N 0170-075	VM38-16 P/N 0170-074
Bowl Vent Type	Yes	Yes	Yes	Yes	Yes
Bowl Vent Hole	1.3ø	1.9ø	1.5ø	3.8ø	3.8ø
Main Jet (Low Alt. Avg.)	No. 300 P/N 6505-128	No. 460 P/N 6505-127	No. 230 P/N 6505-067	No. 400 P/N 6505-124	No. 530 P/N 6505-170
Main Jet (High Alt. Avg.)	No. 280 P/N 6505-080	No. 430 P/N 6505-146	No. 200 P/N 6505-144	No. 370 P/N 6505-072	No. 500 P/N 6505-151
Air Jet	Without	Without	Without	Without	Without
Jet Needle	6DH4-3 P/N 6505-003	6DH4-3 P/N 6505-003	5DP7-3 P/N 6505-050	6DH4-3 P/N 6505-003	6DH4-3 P/N 6505-003
Needle Jet	P-O (No. 159) P/N 6505-155	P-O (No. 166) P/N 6505-007	O-8 (No. 182) P/N 6505-181	P-O (No. 159) P/N 6505-155	Q-O (No. 166) P/N 6505-190
Cut Away	No. 2.0 P/N 6505-002	No. 2.0 P/N 6505-002	No. 2.0 P/N 6505-048	No. 2.0 P/N 6505-177	No. 1.5 P/N 6505-178
Pilot Jet	No. 30 P/N 6505-073	No. 25 P/N 6505-075	No. 35 P/N 6505-029	No. 35 P/N 6505-029	No. 30 P/N 6505-073
ByPass Hole	1.4ø	1.4ø	1.4ø	1.4ø	1.4ø
Pilot Outlet	0.8ø	0.8ø	0.8ø	0.7ø	0.7ø
Air Screw	1.0 Turn	1.0 Turn	1.0 Turn	1.0 Turn	1.0 Turn
Valve Seat	1.5ø	1.5ø	1.5ø	1.5ø	1.5ø
Starter Jet	1.5ø	1.5ø	1.5ø	1.5ø	1.5ø
Fuel Level*	22 ± 1.0mm	22 ± 1.0mm	22 ± 1.0mm	18.1 ± 1.0mm	18.1 ± 1.0mm
ByPass Pitch	3.75 ± 0.1mm	3.75 ± 0.1mm	3.75 ± 0.1mm	3.8 ± 0.1mm	3.8 ± 0.1mm
Main Jet Washer	None	None	VM20-169	VM20-169	VM38/09a G.S.
Fuel Pump	1 of DF52-31/001	1 of DF52-31/001	2 of DF52-21/001	2 of DF21/001	2 of DF21/001
Extension Tube	None	None	None	50mmID-13mmLg	50mmID-13mmLg

***FUEL LEVEL: Fuel level actual distance between bore center and fuel level but dimension is height dimension from float chamber gasket surface to float arm when mixing chamber body is upside down and float chamber gasket is removed.**

High altitude is defined as over 5,000 ft.

KEY:

ø – Diameter mm

MIKUNI MAIN JETS AVAILABLE FROM ARCTIC			
Jet No.	Arctic Part No.	Jet No.	Arctic Part No.
150	6505-168	450	6505-147
160	6505-064	460	6505-127
170	6505-065	470	6505-148
180	6505-056	480	6505-149
190	6505-066	490	6505-150
200	6505-144	500	6505-151
210	6505-145	530	6505-170
220	6505-137	560	6505-172
230	6505-067	590	6505-173
240	6505-079	620	6505-174
250	6505-068	680	6505-169
260	6505-017		
270	6505-069		
280	6505-080		
290	6505-123		
300	6505-128		
310	6505-136		
320	6505-074		
330	6505-070		
340	6505-076		
350	6505-071		
360	6505-038		
370	6505-072		
380	6505-077		
390	6505-078		
400	6505-124		
420	6505-125		
430	6505-146		
440	6505-126		

MIKUNI PILOT JETS AVAILABLE FROM ARCTIC			
Jet Size	Arctic Part No.	Jet Size	Arctic Part No.
20	6505-138		
25	6505-075		
30	6505-073		
35	6505-029		
40	6505-047		

MIKUNI INLET SEAT ASSY.'S AVAILABLE FROM ARCTIC					
Seat Dia.	Carb. Size (mm)	Arctic Part No.	Seat Dia.	Carb. Size (mm)	Arctic Part No.
1.5mm (Steel)	28, 30, 32, 34	6505-026			
1.5mm (Steel)	36, 38, 40, 44	6505-103			
1.5mm (Viton)	28, 30, 32, 34	6505-160			
1.5mm (Viton)	36, 38, 40, 44	6505-171			
1.8mm (Viton)	36, 38, 40, 44	6505-175			
2.0mm (Viton)	36, 38, 40, 44	6505-176			

MIKUNI NEEDLE JETS AVAILABLE FROM ARCTIC					
Jet No.	Arctic Part No.	Jet No.	Arctic Part No.	Jet No.	Arctic Part No.
0.8 (182)	6505-181				
P-O (169)	6505-051				
P-4 (169)	6505-164				
P-O (159)	6505-155				
P-O (166)	6505-007				
Q-5 (159)	6505-119				
AA-5 (224)	6505-099				
BB-O (224)	6505-182				
BB-5 (224)	6505-180				
Q-O (166)	6505-190				
(FOR NEEDLE JET NO. EXPLANATION, SEE TABLE I.)					

MIKUNI JET NEEDLES AVAILABLE FROM ARCTIC			
Needle No.	Arctic Part No.	Needle No.	Arctic Part No.
5DP7	6505-050		
6DH4	6505-003		
7DH2	6505-097		

MIKUNI SLIDES AVAILABLE FROM ARCTIC					
Slide No.	Carb. Size (mm)	Arctic Part No.	Slide No.	Carb. Size (mm)	Arctic Part No.
2.0	28-30	6505-048	2.0	32-34**	6505-183
3.0	28-30	6505-161			
1.5	32-34*	6505-130			
2.0	32-34	6505-002			
2.0	36*	6505-154			
2.0	36**	6505-177			
2.5	36*	6505-115			
1.5	38**	6505-178			
1.0	40-44*	6505-092			
2.0	40-44**	6505-179			

NOTE: **Slides designated by (*) cannot be used with cables on Arctic Cat Snowmobiles using automatic ignition kill switch built into throttle handle.**

Slides designated by (**) can be used with 1975 model carbs only due to a change in the dia of slide guide pin.

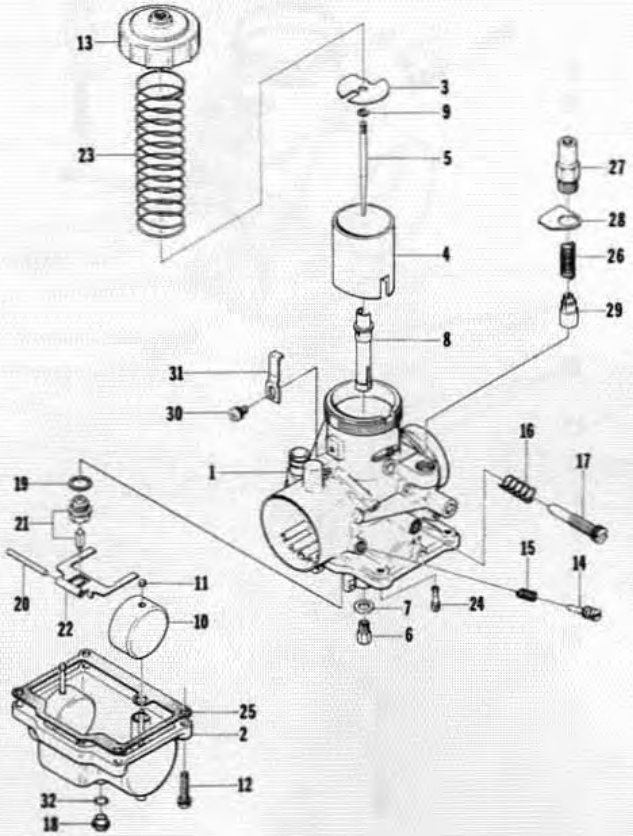

VM 28 - 132 Carburetor

*Not a Serviceable Part

Ref. No.	Part No.	Qty.	Description
1	*	1	Mixing Body Assy.
2	6505-189	1	Float Chamber Body Assy.
3	6505-045	1	Plate
4	6505-048	1	Piston Valve, CA 2.0
5	6505-050	1	Jet Needle
6	6505-067	1	Main Jet No. 230
7	6505-006	1	Washer, Main Jet
8	6505-181	1	Needle Jet, 08-182
9	6505-008	1	Clip, Spring
10	6505-049	2	Float
11	6505-010	2	Cap
12	6505-014	4	Washer, Spring
13	6505-055	1	Top, Mixing Chamber
14	6505-019	1	Screw, Air
15	6505-020	1	Spring, Screw - Air
16	6505-021	1	Spring

Ref. No.	Part No.	Qty.	Description
17	6505-101	1	Screw, Throttle Stop
18	6505-184	1	Screw, Drain
19	6505-024	1	Washer, Seat - Valve
20	6505-153	1	Pin, Float Arm
21	6505-160	1	Valve, Needle - 1.5
22	6505-027	1	Arm, Float
23	6505-163	1	Spring, Piston Valve
24	6505-029	1	Pilot Jet No. 35
25	6505-030	1	Gasket
26	6505-033	1	Spring, Plunger
27	6505-162	1	Cap, Starter - Plunger
28	6505-034	1	Washer
29	6505-035	1	Plunger, Starter
30	6505-036	1	Washer, Spring
31	6505-186	1	Plate
32	6505-185	1	O Ring

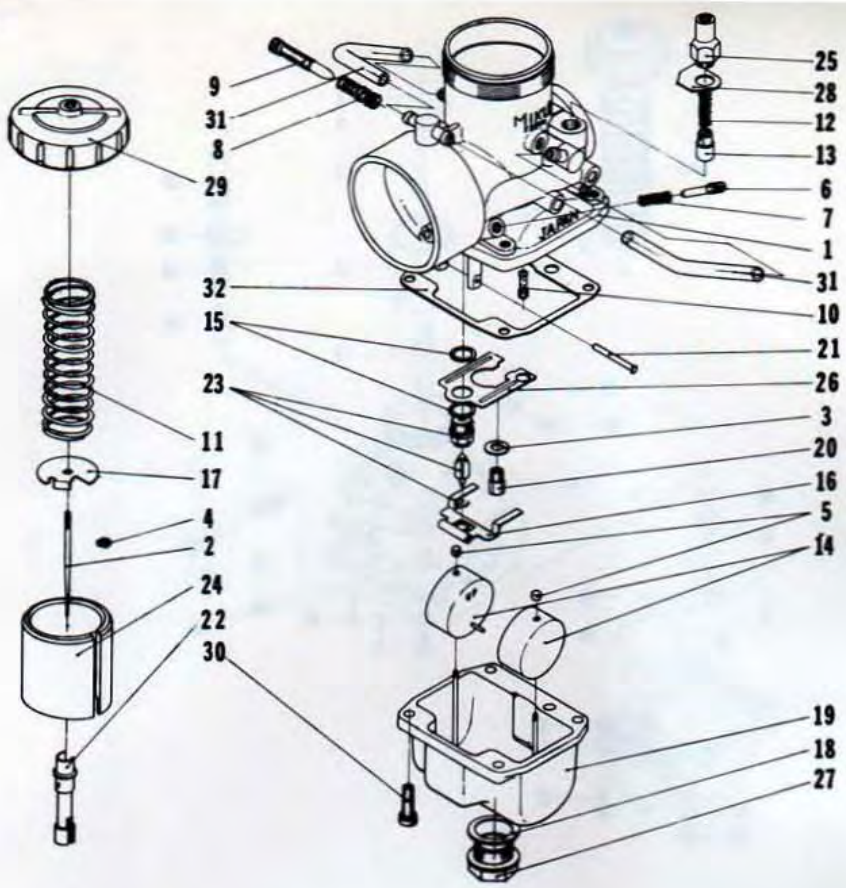

VM 36 - 22 Carburetor

*Not a Serviceable Part

Ref. No.	Part No.	Qty.	Description
1	*	1	Mixing Body Assy.
2	6505-003	1	Jet Needle
3	6505-006	1	Washer, Main Jet
4	6505-008	1	Clip, Spring
5	6505-010	2	Cap
6	6505-019	1	Screw, Air
7	6505-020	1	Spring, Screw - Air
8	6505-021	1	Spring
9	6505-022	1	Screw, Throttle Stop
10	6505-029	1	Pilot Jet No. 35
11	6505-031	1	Spring, Valve Throttle
12	6505-033	1	Spring, Plunger
13	6505-035	1	Plunger, Starter
14	6505-049	2	Float
15	6505-102	2	Washer, Valve - Seat
16	6505-104	1	Float Arm, Carb.

Ref. No.	Part No.	Qty.	Description
17	6505-111	1	Plate, Carb.
18	6505-112	1	Washer, Plug
19	6505-121	1	Body Assy., Float Chamber
20	6505-124	1	Main Jet No. 400
21	6505-153	1	Pin, Float Arm
22	6505-155	1	Needle Jet, P-O 159
23	6505-171	1	Valve, Needle - 1.5
24	6505-177	1	Piston Valve, CA 2.0
25	6505-188	1	Cap, Starter - Plunger
26	6505-191	1	Plate
27	6505-192	1	Screw, Drain
28	6505-193	1	Washer
29	6505-194	1	Top, Mixing Chamber
30	6505-195	4	Screw
31	6505-196	2	Tube, Air Vent
32	6505-197	1	Gasket

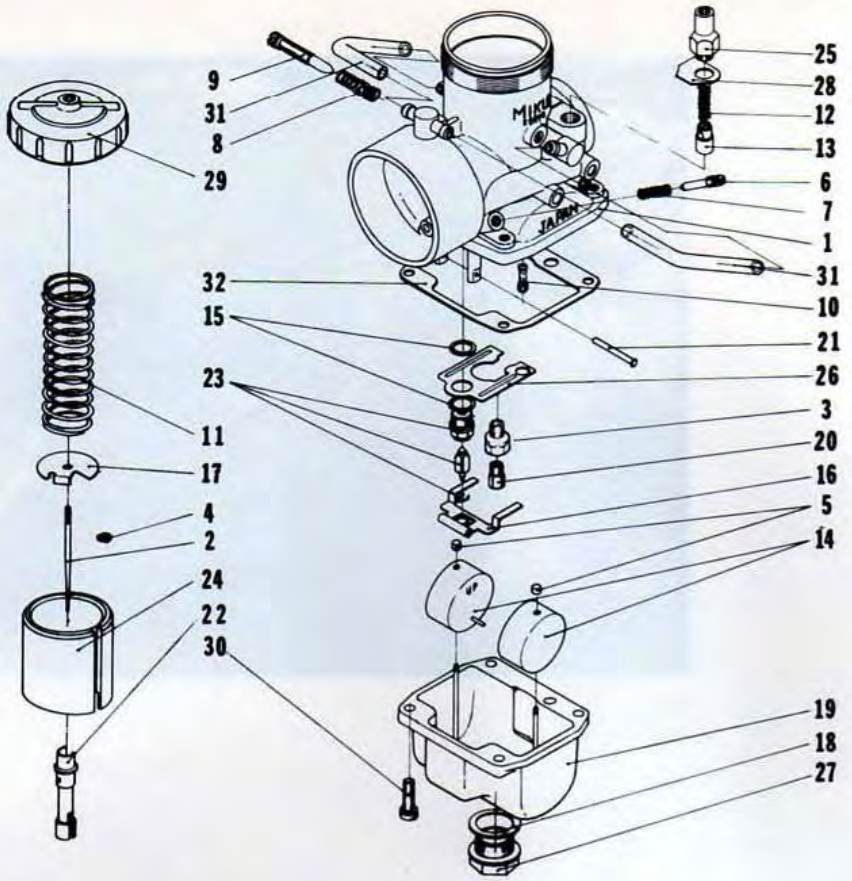

VM 38 - 16 Carburetor

*Not a Serviceable Part

Ref. No.	Part No.	Qty.	Description
1	*	1	Mixing Body Assy.
2	6505-003	1	Jet Needle
3	6505-199	1	Guide Screw
4	6505-008	1	Clip, Spring
5	6505-010	2	Cap
6	6505-019	1	Screw, Air
7	6505-020	1	Spring, Screw - Air
8	6505-021	1	Spring
9	6505-101	1	Screw, Throttle Stop
10	6505-073	1	Pilot Jet, 30
11	6505-031	1	Spring, Valve - Throttle
12	6505-033	1	Spring, Plunger
13	6505-035	1	Plunger, Starter
14	6505-049	2	Float
15	6505-102	2	Washer, Valve Seat
16	6505-104	1	Float Arm, Carb.

Ref. No.	Part No.	Qty.	Description
17	6505-111	1	Plate, Carb.
18	6505-112	1	Washer, Plug
19	6505-121	1	Body Assy., Float Chamber
20	6505-170	1	Main Jet, No. 530
21	6505-153	1	Pin, Float Arm
22	6505-190	1	Needle Jet, Q-O 166
23	6505-171	1	Needle Valve Assy., 1.5
24	6505-178	1	Piston Valve, CA 1.5
25	6505-188	1	Cap, Starter Plunger
26	6505-191	1	Plate
27	6505-198	1	Screw, Drain
28	6505-193	1	Washer
29	6505-194	1	Top, Mixing Chamber
30	6505-195	4	Screw
31	6505-196	2	Tube, Air Vent
32	6505-197	1	Gasket

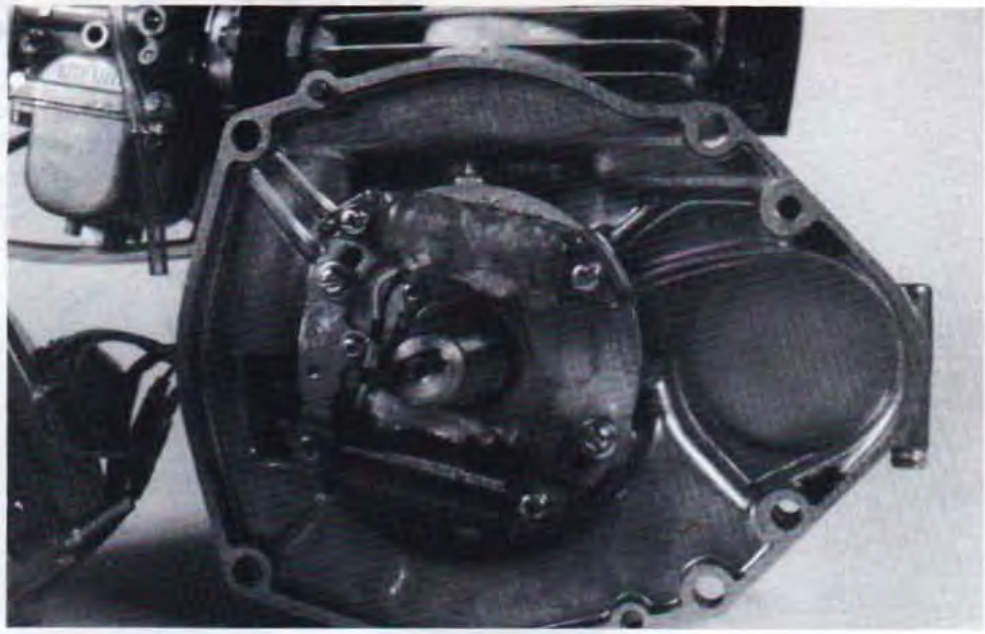

IGNITION TIMING

CD IGNITION CHECK AND ADJUSTMENT: ACCURATE TIMING IS CRITICAL TO MAXIMUM ENGINE PERFORMANCE

A recheck of the specifications on page 13 will show that spark timing varies from engine size to engine size in the Z model. Your ignition timing should be set at the proper time at the factory or the dealer, but the accuracy of the timing should be carefully checked by the competitor prior to beginning performance tuning.

It may be necessary, on some 250cc Z engines, to add a timing mark to the stator plate and flywheel to provide for resetting the ignition timing on this engine to 12° BTDC MOD and 14° stock.

All 1975 El Tigre Z engines have a 17° BTDC and 14° BTDC mark on the stator plate. The corresponding 17° mark on the flywheel is the F mark, the corresponding 14° mark is just adjacent to the F mark. In some cases, the 250cc engine will call for a 12° mark and this mark must be made on the stator plate and flywheel if it does not appear on the stock parts.

See Fig. 2.

Procedure:

- Scribe a mark on the stator plate 0.090 inch above the 14° mark. Move the stator plate so the new 12° mark lines up with the boss in the crankcase. Tighten stator plate retaining screws.

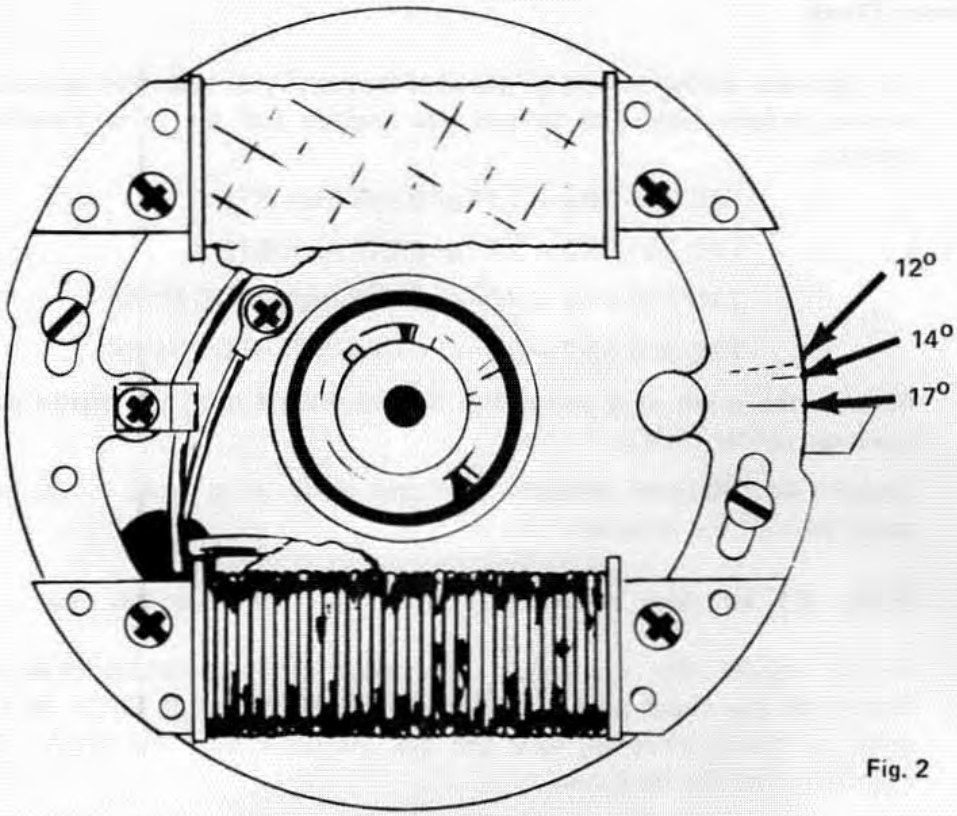

Fig. 2

- Install the flywheel.
- Remove the spark plug and rotate the crankshaft until the piston is at top dead center (TDC).
- Install dial indicator adaptor into the spark plug hole. Slide dial indicator into the adaptor. (Dial indicator must be parallel with cyl. bore.)

NOTE: DO NOT lock the dial indicator into the adaptor at this time.

- Slowly rotate the crankshaft clockwise and counterclockwise to determine the exact point of needle reversal. At the point of needle reversal, lock the dial indicator into the adaptor by tightening the thumb screw.
- Slowly rotate the crankshaft clockwise and counterclockwise to determine the point of needle reversal, which is top dead center (TDC). Set the moveable face of the dial indicator ("O" index mark), Fig. 3, at the exact point of needle reversal. Lock the moveable face in position.
- Slowly rotate the crankshaft counterclockwise and stop when the dial indicator needle registers 0.033 inch.
- Scribe a mark on the flywheel, directly below the timing mark on the crankcase. The mark that is scribed on the flywheel is a 12° (0.033 inch) reading and corresponds with the 12° mark that was scribed into the stator plate.
- Check the timing, using a Merc Tronic timing light, model 62-61-2A See "Timing Check", page 30.

Timing Check

- The ignition timing should be checked frequently to maintain optimum engine performance. The various size engines (cc) are to be timed as follows:

  T7C 440 FR2 – 17° or 0.066 Inch BTDC

  T7C 340 FR2 – 14° or 0.044 Inch BTDC

  T7C 250 FR2 – 12° or 0.033 Inch BTDC MOD

  T7C 250 FR2 – 14° or 0.044 Inch BTDC Stock

- Remove the spark plug and rotate the crankshaft until the piston is at top dead center (TDC).
- Install dial indicator adaptor into the spark plug hole. Slide dial indicator into the adaptor.

  NOTE: DO NOT lock the dial indicator into the adaptor at this time.

- Slowly rotate the crankshaft clockwise and counterclockwise to determine the exact point of needle reversal (piston at TDC). At the point of needle reversal, lock the dial indicator into the adaptor by tightening the thumb screw.
- Slowly rotate the crankshaft clockwise and counterclockwise to determine the point of needle reversal, which is top dead center (TDC). Set the moveable face of the dial indicator ("O" index mark), Fig. 3, at the exact point of needle reversal. Lock the moveable face in position.

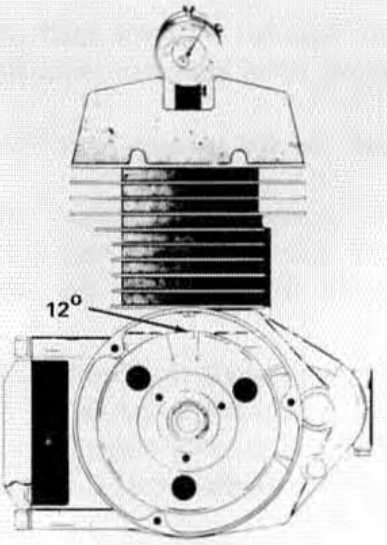

Fig. 3

- Slowly rotate the crankshaft counterclockwise and stop when the dial indicator needle registers the specified timing setting (See: Engine Specifications, page 13). If timing mark on flywheel does not line up with the crankcase timing mark when dial indicator reading is as specified, the stator plate is to be adjusted, Fig. 2.

When flywheel installed, check the ignition timing at 6000 RPM, using a model 62-21-2A Merc Tronic timing light.

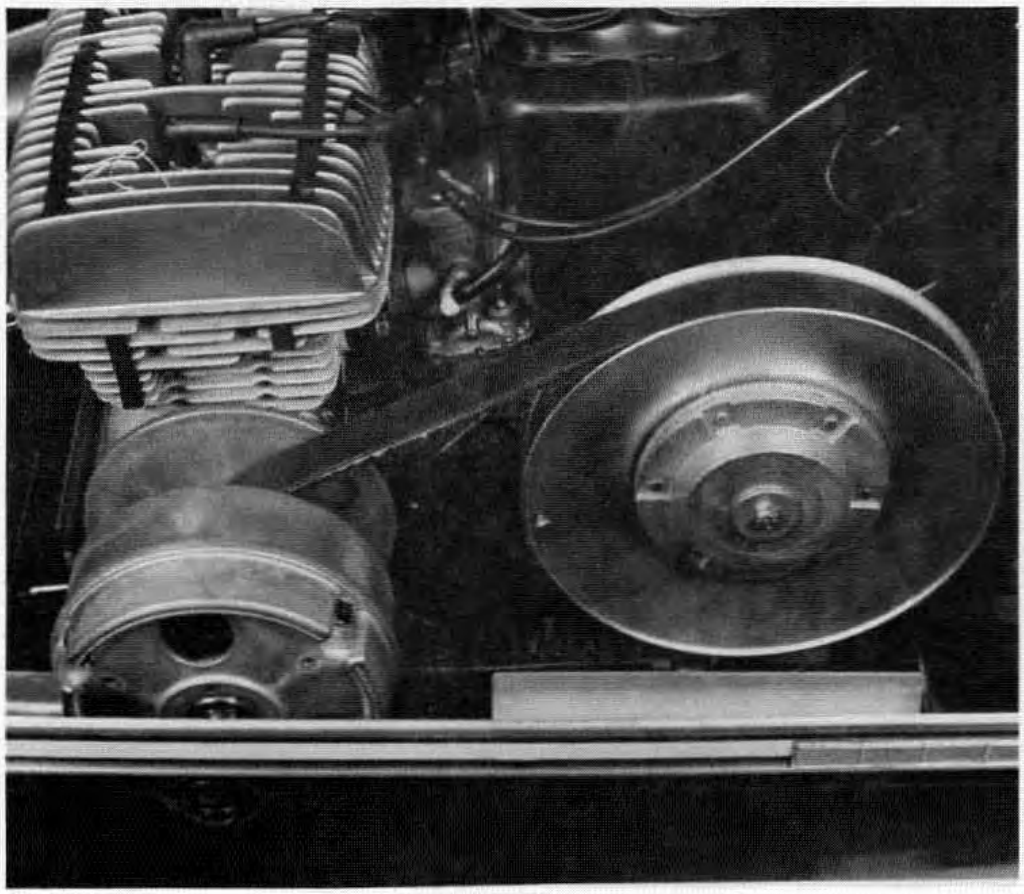

THE ARCTIC CAT DRIVE SYSTEM

TUNING AND MAINTENANCE OF THE DRIVE SYSTEM COMPONENTS FOR OPTIMUM PERFORMANCE DEPENDS ON A THOROUGH KNOWLEDGE OF THE FACTORS THAT INFLUENCE PERFORMANCE CHARACTERISTICS

Arctic Enterprises' Customer Service Department gets literally hundreds of telephone calls each year from Arctic Cat owners who ask, "Why does John Doe's machine go faster than mine?" In many of these cases, the problem exists in an improperly tuned and maintained drive system. The reason John Doe's sled goes faster is because he probably understands his drive system and knows what to do about his problems. Many problems with drive systems can be cured by very simple remedies that, for one reason or another, are overlooked or forgotten by the individual in his efforts to establish a good-running drive unit.

The following section has been prepared to provide a basic understanding of the theory and variables involved in Arctic Cat snowmobile drive systems. This is important information for the beginner and the old-timer alike. Do not disregard the information presented here because you think you know all there is to know about clutching in snowmobiles, even the racers and engineers who provided the information for this section can't say they know everything about the subject – nobody does. Read this section carefully and you will be better able to diagnose problems and set up your drive system to match your racing requirements.

ARCTIC CAT DRIVE SYSTEM THEORY: 6 MACHINE VARIABLES, EACH WITH ITS OWN INDIVIDUAL EFFECT ON DRIVE PERFORMANCE

Note: Rules for racing in the STOCK classes will vary from association to association. Some rulebooks will allow changes to internal clutch parts (like weights, ramps and springs) and others will not. Some rulebooks will call for a certain specified engagement RPM, certain specified Part Numbers on clutch components and other such rules. Knowing the rules and conforming to them is YOUR RESPONSIBILITY and the information in this section is not meant to be used as a guide to the legal set-up in your racing association.

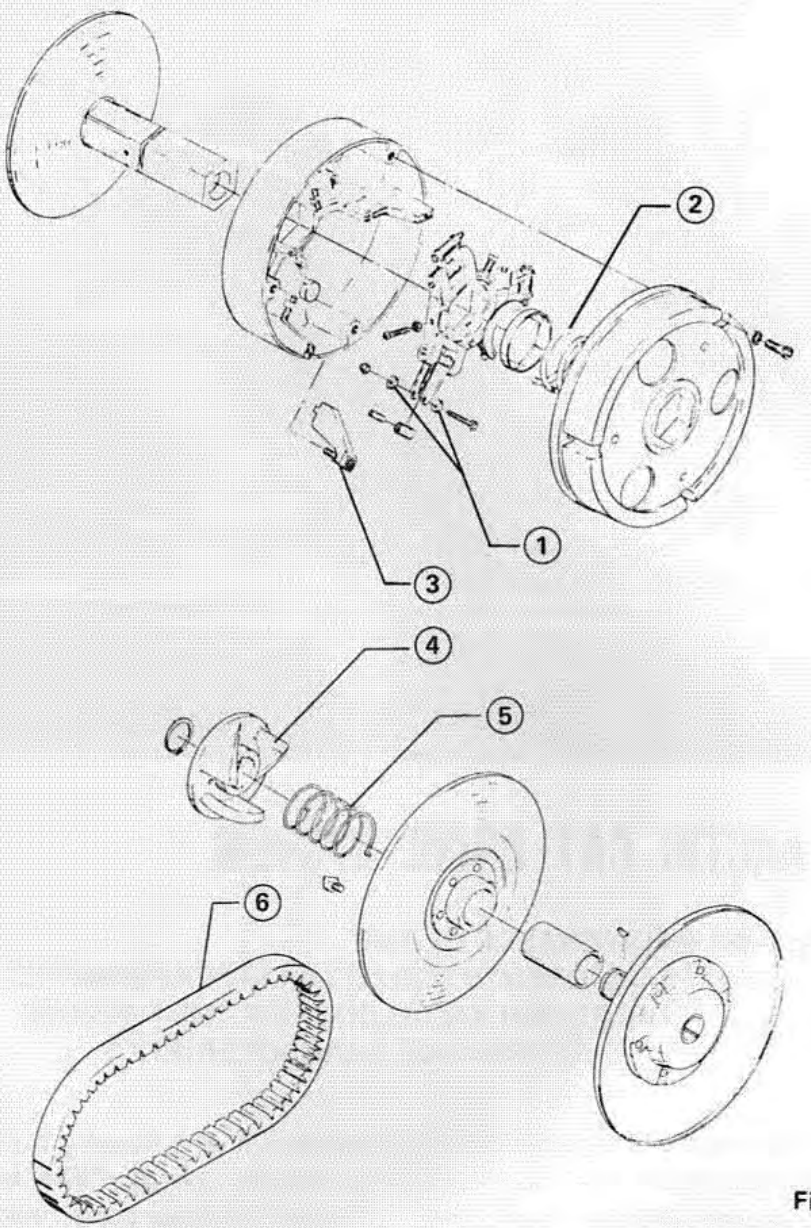

Fig. 4

1. Clutch Weights

The weights in the engine-drive clutch affect the engine RPMs at every vehicle speed. The lighter the weight used, the higher engine RPMs will be throughout the shift pattern. The practical effect of a change to lighter weights, for example, would be higher RPMs to maintain the same vehicle speed. If your machine turned 7000 RPM to achieve 45 MPH with one set of weights, installation of a lighter set would mean more than 7000 RPM would be necessary to achieve the same 45 MPH. The opposite effect will be felt if a change is made to a set of heavier weights. The clutch weights also have an effect on egagement speed, but this effect depends on other factors (like drive spring and ramp configuration) so the exact effect of such a change cannot be stated accurately. Changes to clutch weight must be tested carefully by the individual tuner and weights must always be changed **as a set.**

(2.) Drive Spring

The Drive Spring is a second variable that affects engine RPMs and engagement speeds. The Spring's major effect is on engagement speed. The use of a stronger spring will result in a higher engagement speed, greater RPMs throughout the shift pattern and faster down-shift reaction to throttle openings and load.

(3.) Drive Ramp

The ramps in the Arctic drive clutch are the third and last variable in the shift characteristics of the unit. Engagement speed, up-shift RPMs and down-shifting characteristics are all determined in part by the ramp design. Drive Clutch Ramps made by Arctic Enterprises are carefully designed to provide the proper shift pattern for a specific engine. The ramps are specifically designed to follow the torque curve of the engine in which they are installed and changes in the normal torque curve will make the shift pattern incorrect and adversely affect performance.

(4.) Driven Ramp

The cam angle of the Driven Ramp will be 30°. This is a dyno-proven angle and under no circumstances, high-performance tuning or otherwise, should this important angle be changed. It is pointed out here simply because it is a variable, not because it is something to change. Experience in racing and in the dyno room has proven this system's effectiveness in providing the proper shift pattern in the driven unit and it should be left stock in every racing application.

(5.) Driven Spring

All 1975 Z models will use a five coil black spring. The spring tension on the driven cam can be adjusted by moving the position of the spring mounting to provide more or less tension on the moveable pulley sheave. Greater tension on the spring will raise RPM and lesser tension will reduce RPM at the same vehicle speed. This can be an effective and fast adjustment to give you 500 RPMs, either plus or minus.

(6.) Drive Belt

The Drive Belt plays an important part in drive system performance in every El Tigre and every class of racing. Probably the most important factor in drive system set-up this season will be maintaining proper outside circumference of the drive belt. The drive system in 1975 El Tigre and Z models is very closely calibrated and the small differences in O.C. can and will make big differences in performance. Check belt specifications for your machine and carefully measure every belt you use for proper dimensions. You will have few performance problems with the right sized belts when they are new, but a belt loses width as it is used and this can be a source of problems. Use new belts as much as possible for racing and stick with the production belt specified for your machine. The drive belt MUST be the right size to deliver the correct shifting characteristics from the drive system.

Measure your belts for tolerances before you buy them.

DRIVE SYSTEM PERFORMANCE IS AFFECTED BY VARIABLES EXTERNAL TO THE MACHINE ITSELF . . . KEEP THEM IN MIND WHILE YOU TUNE FOR TOP PERFORMANCE

(1.) Rider Weight

Naturally, this will only be a factor if there is a change of rider. The Arctic Cat drive system is load-sensitive, so changes in the load (rider) will affect the shift characteristics of the clutch and adjustments will sometimes be necessary.

(2.) Altitude

Altitude affects the power output of your engine and this change in output curve will have a distinct effect on drive system performance. This factor will be most important when you race in a different area of the country each weekend, especially in the western States and Provinces. Because increased altitude means reduced power, clutch changes for altitude should take the form of lighter clutch weights, ramps cut for higher engagement and greater tension on the driven spring. This is not a cut-and-dried rule, however, many times just gearing down and correcting carburetion will be enough to deliver good performance.

(3.) Chain Case Sprockets

See chain case, page 40.

It is common practice at racetracks today to use sprocket changes to match gearing to race conditions. Sprockets should only be changed to match track condition, type of race, distance of race (length of straightaway) and changes in altitude. Sprocket changes will affect the ratio of RPM to vehicle speed, so always take clutch performance into account when switching chain case gearing.

(4.) Carburetion

Tuning for correct carburetion always comes before clutch tuning. This is because the clutch must be set up to respond to a certain torque curve and significant changes in power output will have an adverse effect on your clutching. You can and will make small changes to carburetion after tuning your drive system, but the closer you are with carburetion, the easier it will be to set up good clutching.

(5.) Racetrack Conditions

Always be prepared to change your clutch to match existing conditions at the race track. Conditions at different tracks around the country can change day-by-day, even hour-by-hour. The best way to be prepared for condition changes is to have the different set-ups ready to match to the track. Realize that clutching changes will be necessary and have the parts and tools to make the changes required and you can solve your drive system problems. Warm days and wet, sticky tracks will require a lighter weight set-up, cold days and icy tracks will require heavier weights.

6. Racetrack Size

Like racetrack conditions, the size of the track can give you a good idea of what kind of set-up you will need for optimum performance. On the smaller tracks, you would tune for increased RPM so the sled will accelerate faster and shift through quicker. Long tracks may require tuning for reduced RPM and more top-end speed.

7. Distance of Race

The biggest thing to remember in long races is that 2-stroke engines tend to heat up and lose power in the long haul. To properly tune for long race conditions, you must perform long, continuous-running tests and arrive at the best set-up by trial-and-error. No two engines will run the same due to differences in carburetion and general sled set-up . . . the best possible set-up for long runs can only come from hours of careful testing. For long races on big ovals or cross-country runs, compromise for a low engagement speed to improve high-speed performance.

8. Track Studding

Differences in track studding will have an effect on the load felt by your clutch in much the same way as rider weight. When studding your track, remember that too much studding can pull your engine performance down by adversely affecting your shift pattern. Always do your clutch tuning with the stud pattern you plan to race with.

9. Suspension Set-Up

Suspension set-up will only have an effect on clutch performance if you have changed from original manufacturer's size, parts or specifications. If you make radical suspension changes, be prepared to re-tune your drive system accordingly. Track tension and alignment must be checked regularly to insure that added load is not placed on the drive system by misadjusted track components.

See track tension, page 51.

OPTIMUM CLUTCH PERFORMANCE REQUIRES CAREFUL ATTENTION TO MAINTENANCE OF STOCK MEASUREMENTS AND INSTALLATION SPECIFICATIONS

Maintaining stock specifications for center-to-center distance and offset between the drive and driven pulleys and the correct Outside Circumference of the drive belt is critically important to proper clutch performance. The maintenance of these dimensions will be doubly important in the STOCK class where engagement RPM is specified in the rulebooks.

Specifications for center-to-center distance, offset and drive belt O.C. are given in the charts on the following pages. Maintenance of these dimensions and use of new drive belts for racing will go a long way to help you avoid problems in maintaining proper engagement RPM and tuning for optimum performance.

CLUTCH ALIGNMENT AND OFFSET PROCEDURES

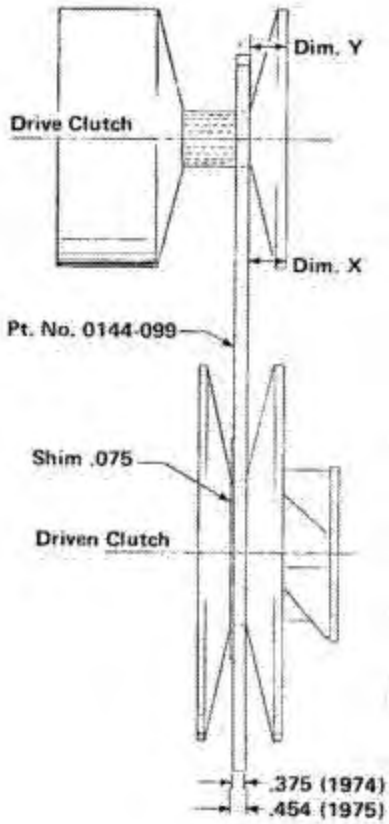

CLUTCH ALIGNMENT AND OFFSET PROCEDURES

THERE ARE **TWO** REQUIREMENTS FOR PROPER ALIGNMENT BETWEEN THE DRIVE CLUTCH AND DRIVEN CLUTCH:

1. PARALLELISM
2. OFFSET

There are two tools available from Arctic Enterprises for checking proper alignment. Tool, Part No. 0144-106, should be used for quick reference and Tool, Part No. 0144-099, is a clutch alignment bar that should be used for accurate alignment and offset for competition.

Checking alignment on your Z with Tool 0144-099 requires the use of a .075" shim made to use with the bar tool. You may also make a bar 18" long and .454" wide. Use of 1" thick stock is recommended to assure the tool is absolutely straight when finished.

Procedures:

1. **Parallelism: (Using Tool, Part No. 0144-099, with .075" Shim)**
   - Install the alignment bar between the driven clutch sheaves as shown in the illustration.
   - Take measurements at location X and Y and compare the readings.

     Rule I: Dimension X must never exceed dimension Y.

     Rule II: Dimension Y must never exceed dimension X by more than 1/16" (.0625"). This tolerance in dimension Y is for compensation of deflection caused by engine torque.

2. **Offset:**
   - After parallelism is correct, the offset check can be made.
   - Both dimension X and Y should be 7/8" to 15/16". If either one is not within these limits, the offset must be corrected by removing the capscrew and washers from the driven shaft.
   - The proper dimension can then be obtained by removing or adding shims to properly relocate the driven clutch.

Top clutch performance depends on accurate alignment and offset . . . set them carefully and check them regularly.

STOCK ARCTIC CAT CLUTCH SPECIFICATIONS

1974 Models	Drive Clutch	Offset Measurement	Center To Center Distance	Driven Clutch	Drive Belt Information		
					O.C.	Width	PN
El Tigre 295	225 - 047	.380	11-3/8	226 - 008	45-1/2 ± 3/16	1-1/4	227 - 014
El Tigre 340	225 - 042	.380	11-3/8	226 - 008	45-1/2 ± 3/16	1-1/4	227 - 014
El Tigre 400	225 - 041	.380	11-3/8	226 - 008	45-1/2 ± 3/16	1-1/4	227 - 014
El Tigre 440	225 - 043	.380	11-3/8	226 - 008	45-1/2 ± 3/16	1-1/4	227 - 014

1974 Models	Clutch		MOD Kits		Stock Ramp	Stock Weight	Stock Spring	Rate LB's Per In
	Clutch Engagement	Top RPM's	Engagement	Top RPM's				
El Tigre 295	3800	7500	4500	9000	146 - 162	*146-135	146 - 068 Green	64
El Tigre 340	3800	7500	4500	9000	146 - 162	*146-106	146 - 068 Green	64
El Tigre 400	3800	7500	4500	9000	146 - 162	*146-123	146 - 068 Green	64
El Tigre 440	3800	7500	5000	9500	146 - 162	*146-105	146 - 068 Green	64

1974 Models	Stock Sprockets	Chain Pitch	Driven Clutch Cam	Driven Spring	Driven Clutch Replacement 1975	Mod Kit Ramp and Weight Kit
El Tigre 295	19/39	70	30°	148 - 070 Black	0226-010	0146-228 or 169
El Tigre 340	20/39	70	30°	148 - 070 Black	0226-010	0146-228 or 169
El Tigre 400	22/39	72	30°	148 - 070 Black	0226-010	0146-228 or 169
El Tigre 440	22/39	72	30°	148 - 070 Black	0226-010	0146-169

NOTE: When using a Mod Kit, most of the above is subject to change — follow your variables and your normal requirements.

1975 Models	Drive Clutch	Offset Measurement	Center To Center Distance	Driven Clutch	Drive Belt Information		
					O.C.	Width	PN
El Tigre 340	225 - 041	.454	12	226 - 010	46-11/16	1-1/4	227 - 009
Stock 440	225 - 043	.454	12	226 - 010	46-11/16	1-1/4	227 - 009

1975 Models	Clutch Engagement	Top RPM's	Ramp	Weight	Spring	Rate LB's Per In	Sprockets
El Tigre 340	3800	8000	146 - 193	146 - 123	146 - 068 Green	64	20/39
Stock 440	3800	8000	146 - 143	146 - 105	146 - 068 Green	64	20/35

1975 Models	Chain Pitch - PN	Driven Clutch Cam	Driven Spring
El Tigre 340	70/0107-216	30°	148 - 070 Black
Stock 440	68/0107-215	30°	148 - 070 Black

NOTE: Most of the above is subject to change when using a Mod Kit.

STOCK ARCTIC CAT CLUTCH SPECIFICATIONS

1975 Z Models	Drive Clutch	Offset Measurement	Center To Center Distance	Driven Clutch	Clutch Engagement	Top RPM's
El Tigre 250	225 - 065	.454	12	226 - 010	4000	9000 to 9500
El Tigre 340	225 - 066	.454	12	226 - 010	4000	9000 to 9500
El Tigre 440	0225 - 064	.454	12	226 - 010	4000	9000 to 9500

1975 Z Models	O.C.	Belt Information		Ramp	Weights	Spring	Rate LB's Per In	Sprockets
		Width	PN					
El Tigre 250	46-11/16	1-1/4	0227-020	0146-273	*Optional	146 - 068 Green	64	15-39
El Tigre 340	46-11/16	1-1/4	0227-020	0146-271	*Optional	0146-068 Green	64	19-39
El Tigre 440	46-11/16	1-1/4	0227-020	0146-273	*Optional	0146-068 Green	64	19-35

1975 Z Models	Chain Pitch - PN	Driven Cam	Driven Spring	Mod Kit Clutch Kit	Mod Kit Engagement	Mod Kit Top RPM's
El Tigre 250	68/0107-215	30°	148 - 070 Black	0146-248	6500	9500
El Tigre 340	70/0107-216	30°	148 - 070 Black	0146-249	6500	9500
El Tigre 440	68/0107-215	30°	148 - 070 Black	0146-250	6000	9500

NOTE: When using a Mod Kit, most of the above information is subject to change -- follow your variables and your normal requirements.

*The following weights must be used for USSA racing:
440cc P/N 0146-278
340cc P/N 0146-107
250cc P/N 0146-135

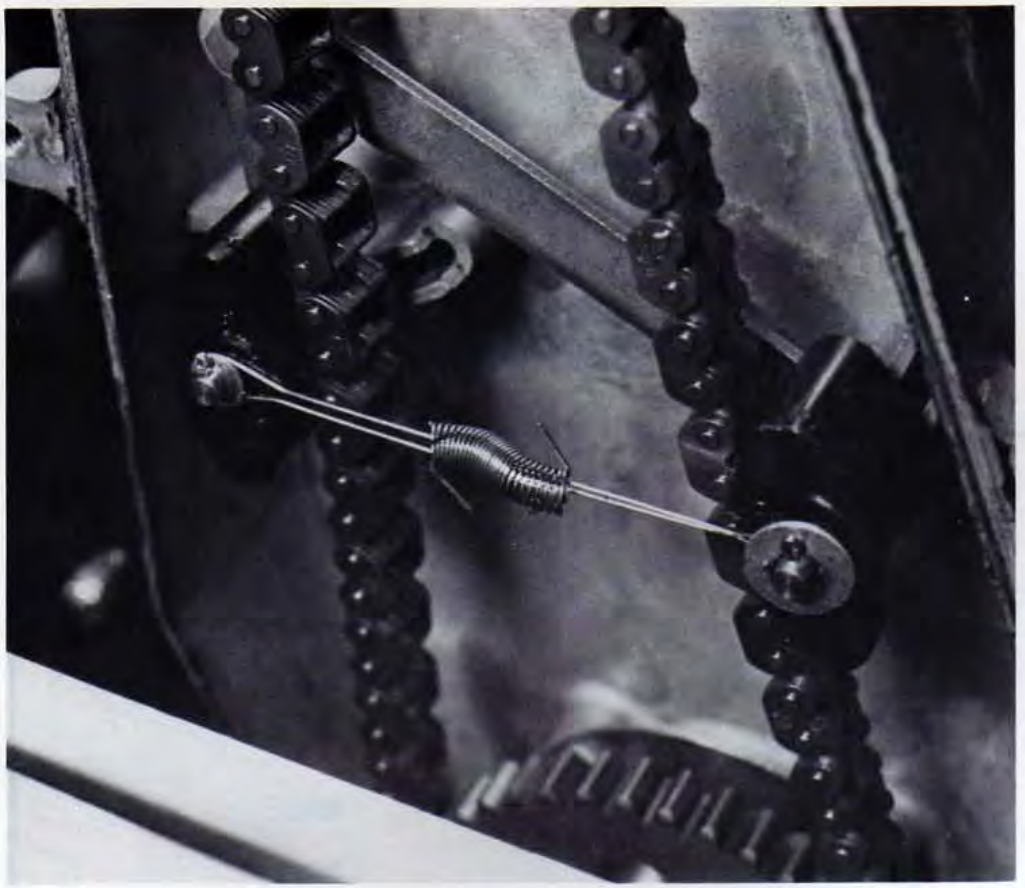

EL TIGRE Z CHAIN CASE GEARING

GEARING TO MATCH THE RACE IS AN IMPORTANT COMPETITIVE STEP. GEAR TO RACE TYPE, RACE DISTANCE AND ALTITUDE.

TUNE TO RACE TYPE:

If you are gearing for a cross-country event where you know there will be plenty of long, flat stretches where you have time to wind up, gear for the best top speed you think your Z will pull under the snow conditions. If you are gearing for an enduro where you will need low and mid-range dig to go fast, gear for a lower top speed to enhance acceleration at lower vehicle speeds. A sloppy, wet oval requires even more power at low vehicle speeds, here you gear the snowmobile to wind up fast out of the turns. See Ratio Chart for sprocket numbers, gear ratios and top speeds.

TUNE TO RACE DISTANCE:

If you gear your Z to go 70 MPH and it takes 1/2 mile to get there, you will be geared too high for the oval where the straightaway is 1/4 mile or less. Determine the kind of distance you will have to accelerate and gear for that distance. Remember, any speed you can pull past the distance of the straightaway will be wasted at the track. Chart (on page 40) lists top speed at 9000 RPM for use as a guide in putting a gearing kit together.

TUNE TO ALTITUDE:

2-stroke engines put out less power when the air is thin so the greater the altitude is, the lower you will want to gear. Snowmobile being raced in the mountains of the western states and provinces will run best on lower gearing than used on racers in the midwest and east.

STOCK Z MODEL EL TIGRE GEARING SPROCKET RATIO CHART

Sprockets	Ratio	Approximate MPH Under Ideal Conditions
15-35	2.33	73.95
15-39	2.60	66.37
16-35	2.19	78.89
16-39	2.44	70.79
17-35	2.06	83.82
17-39	2.29	75.20
18-35	1.94	88.74
18-39	2.17	79.65
19-35	1.84	93.67
19-39	2.05	84.06
20-35	1.75	98.61
20-39	1.95	88.49
21-35	1.67	103.54
21-39	1.86	92.92
22-35	1.59	108.47
22-39	1.77	97.35

NOTE: To maintain proper ratio, this chart was figured on engine RPM of 9,000 with 1 to 1 ratio, using a new 1975 Arctic drive and driven clutch.

PARTS AVAILABLE FROM ARCTIC ENTERPRISES

Sprockets	Part Number
15 Tooth	0107-217
16 Tooth	0107-340
17 Tooth	0107-218
18 Tooth	0107-341
19 Tooth	0107-219
20 Tooth	0107-286
21 Tooth	0107-408
22 Tooth	0107-301
33 Tooth	0107-321
35 Tooth	0107-325
39 Tooth	0107-220

Chain Pitch	Part Number
66	0107-358
68	0107-215
70	0107-216
72	0107-372

For Tightener Combinations:

Common Spring	0107-229
Long Wire Form	0107-236
Short Wire Form	0107-235
Thicker Pad	0107-411
Regular Pad	0107-228

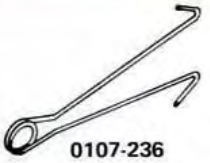
0107-236


0107-235


0107-229


0107-228


0107-411

RECOMMENDED TENSIONER BY SPROCKET COMBINATION

Sprocket	Chain	Clip 1	Clip 2	Spring	Pad 1	Pad 2
15-35	66	0107-236	0107-235	0107-229	0107-411	0107-411
15-39	68	0107-236	0107-236	0107-229	0107-411	0107-411
16-35	66	0107-236	0107-236	0107-229	0107-228	0107-228
16-39	70	0107-236	0107-235	0107-229	0107-411	0107-411
**17-35	68	0107-236	0107-236	0107-229	0107-411	0107-411
17-39	70	0107-236	0107-235	0107-229	0107-411	0107-411
18-35	68	0107-236	0107-235	0107-229	0107-411	0107-411
18-39	70	0107-236	0107-235	0107-229	0107-411	0107-411
19-35	68	0107-236	0107-235	0107-229	0107-411	0107-411
19-39	70	0107-236	0107-236	0107-229	0107-411	0107-411
20-35	68	0107-236	0107-235	0107-229	0107-411	0107-228
20-39	70	0107-236	0107-236	0107-229	0107-228	0107-228
21-35	70	Not Recommended				
***21-39	72	Not Recommended				
22-35	70	0107-236	0107-235	0107-229		0107-411
22-39	72	0107-236	0107-235	0107-229		0107-228

** Same as 19-39
*** Same as 19-35

KEEP THE CHAIN AS TIGHT AS POSSIBLE FOR MAXIMUM PERFORMANCE

When changing gear ratios with sprocket changes, care must be taken to keep the chain as tight as possible. Guidelines for the various ratios and sprocket sizes are listed in the Recommended Tensioner Chart . . . follow these recommendations for chain pitches and tensioner parts for best results.

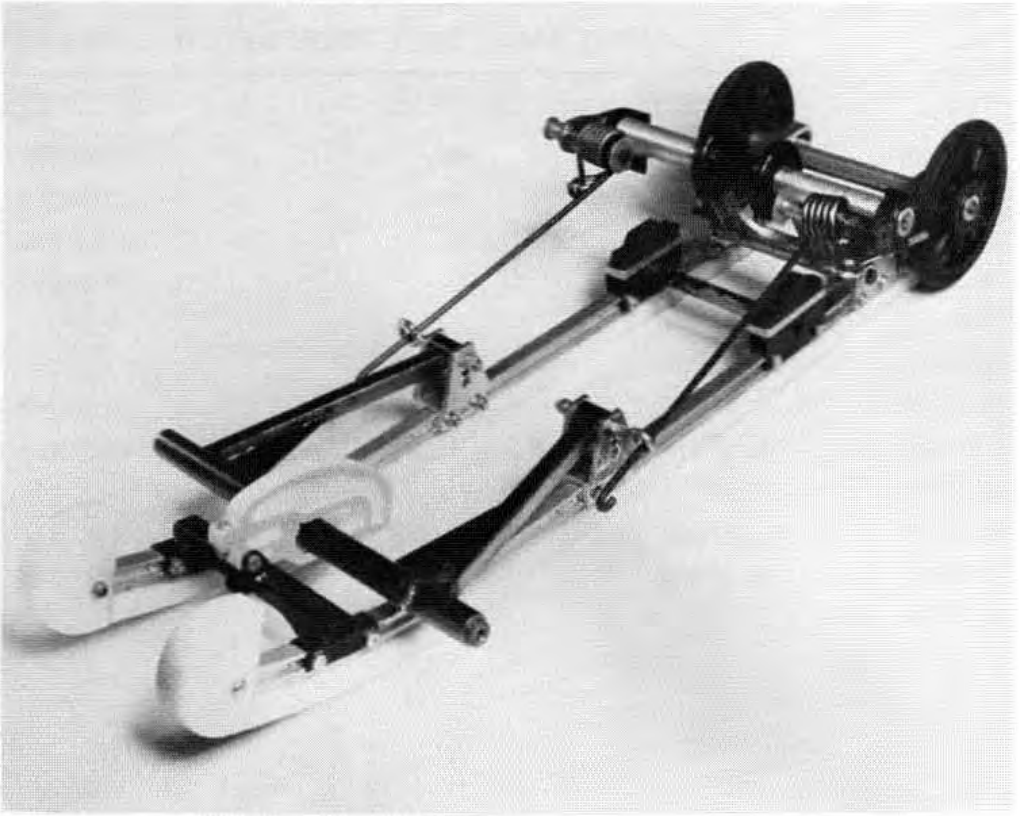

THE 1975 Z SUSPENSION

THE NEW EL TIGRE SUSPENSION SYSTEM

The two most important handling elements in flat track snowmobile racing are the ability to accelerate quickly and the ability to run through the turns tight with power on. The more sensitive the suspension system is to weight shift of the rider, the faster the machine can be moved off the line and through the turns in flat track competition. The new El Tigre suspension is designed for a wide range of adjustability to provide an effective set-up for every rider, every racetrack condition and every riding style.

The suspension system on your Z might be your best "racer's edge" this season. This very important set-up procedure depends on a thorough knowledge of what each suspension component does and how each adjustment affects how the suspension performs under all types of race conditions. Knowing and understanding your suspension could be the difference between winning and losing. Read the numbered explanations below carefully and refer to the illustrations to get off to a good start in setting up your new suspension system.

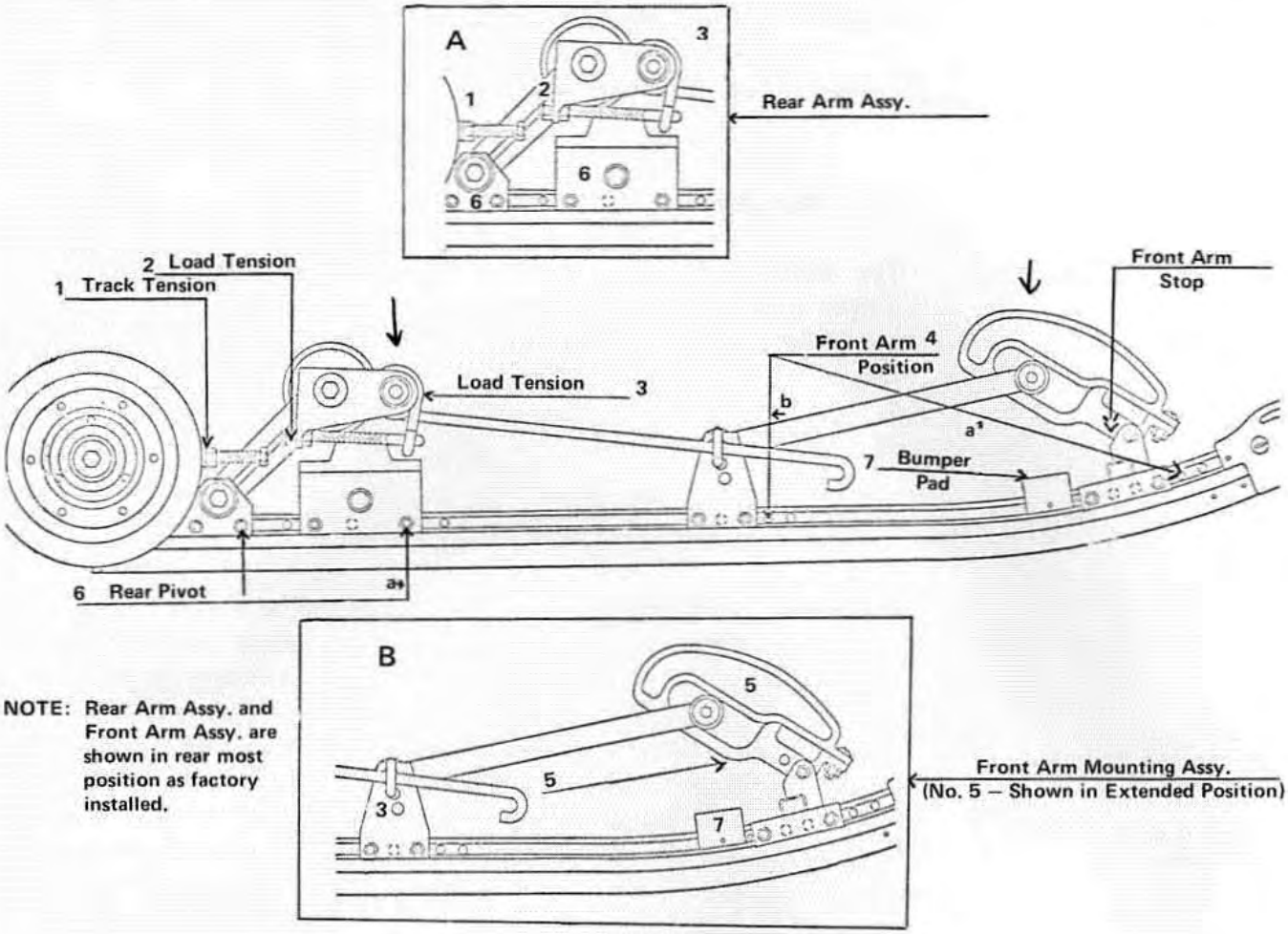

NOTE: Rear Arm Assy. and Front Arm Assy. are shown in rear most position as factory installed.

1. Track Tension – Adjustment of Rear Idler Wheels

Always be sure both rear idler wheels are positioned between the internal drive lugs when adjusting track tension. Exert moderate downward pressure at mid-span of the track section and measure the distance between the hi-fax slide and the inside surface of the track with a rule or tape. The correct distance is 3/4" to 1".

See "Track Tension and Alignment", page 51.

2. Load Tension – Torsion Spring Preload

Spring preload is set up for the individual rider only. Test for proper tension by attempting to bottom the skid frame or touch the chassis to the snow. Adjust the eyebolts equally on each side until it is just tight enough to prevent suspension bottoming under racing conditions.

3. Rear Arm Assembly

The rear suspension spring tension becomes a greater factor when location of the rear assembly mounting is changed. The combination of rear arm assembly location, spring tension and driver position will have to be tested by trial and error to arrive at the best performance set-up. When the rider weight is shifted to the rear of the machine, the suspension should collapse slightly to improve weight transfer for maximum traction and reduced ski drag. When rider weight

See inset drawing A above.

is shifted forward, the spring should be tight enough to raise the rear of the machine and put additional pressure on the skis. (This can be observed under power only.)

Front Arm Assembly

See inset drawing B on previous page.

The front arm mounting assembly greatly affects weight transfer. This weight transfer can be controlled by either the mounting location of the front arm, the position of the front arm or a combination of the two.

4. Front Arm and Mounting Assembly Position

Moving the front arm forward in the chassis and on the rail will increase weight transfer. Moving the arm too far ahead without making adjustments to the front arm stop can cause turning problems. Holes are drilled in the skid rail to provide for movement of the front mounting arm forward or back and this controls the fulcrum that determines weight shift in acceleration or deceleration. Moving the front limit bar (4a) and the front arm pivot (4b) forward increases pressure on the front of the track and reduces ski pressure. Moving the two components back reduces pressure on the front of the track and increases ski pressure.

Mounting points 4a and 4b must be moved together.

5. Front Arm Stop – Trackside Ski Pressure Adjustment

The simplest way to change weight transfer characteristics is by adjusting the front arm stop. Increasing the effective length of the front arm stop will increase weight transfer and shortening it will reduce weight transfer. Moving the mounting to the upper hole will increase ski pressure, moving it to the lower hole will reduce ski pressure.

6. Rear Pivot – Weight Transfer Adjustment

Don't move the rear pivot mountings too far forward. The rider should be able to get his weight ahead of the mounting points to better control ski pressure in turns.

The position of the driver with respect to the rear arm mounting point on the chassis affects the weight transfer under hard acceleration and deceleration. The rear skid frame pivot can be moved forward or back to affect chassis sensitivity to rider weight shift. Moving the pivot forward will increase weight transfer for lighter riders, moving it back will reduce weight transfer for heavy riders. Holes are drilled in the skid frame for this adjustment.

Mounting points 6a and 6b must be moved together.

7. Rubber Front Arm Stop Pad

The lower stop for the front arm is a rubber bumper pad mounted to the rail. If you move the front arm mounting, you must check the clearance with the front of the suspension fully collapsed to insure that no part of the suspension is contacting the track and driving it into the tunnel. The pad can be moved into the proper position for every set-up.

SAFETY CHECKS

- FRONT ARM: Check for cracks, bends and rail twisting. Lube all pivot points, making sure all pivots and links move freely.
- MAIN FRAME SKID RAILS: Check for cracks, bends and twisting. Carefully inspect the slide rails for signs of abnormal wear or gouging. The slide surface on the track should also be checked for burrs that can cause slide drag.
- DURING INSTALLATION: Check that the rails run parallel to the slide surface and guides on the track. Make sure the track has proper tension and is properly aligned. A slightly loose track is better than a too-tight track in competition.

FOR MAXIMUM PERFORMANCE . . . LEARN YOUR SET-UP

Changes from the factory-delivered positions for racing should only be made after careful experimentation and testing by the competitor. The type of studding, stud pattern and length and type of carbides being used will have an effect on your set-up so TUNE YOUR HANDLING COMPONENTS TOGETHER.

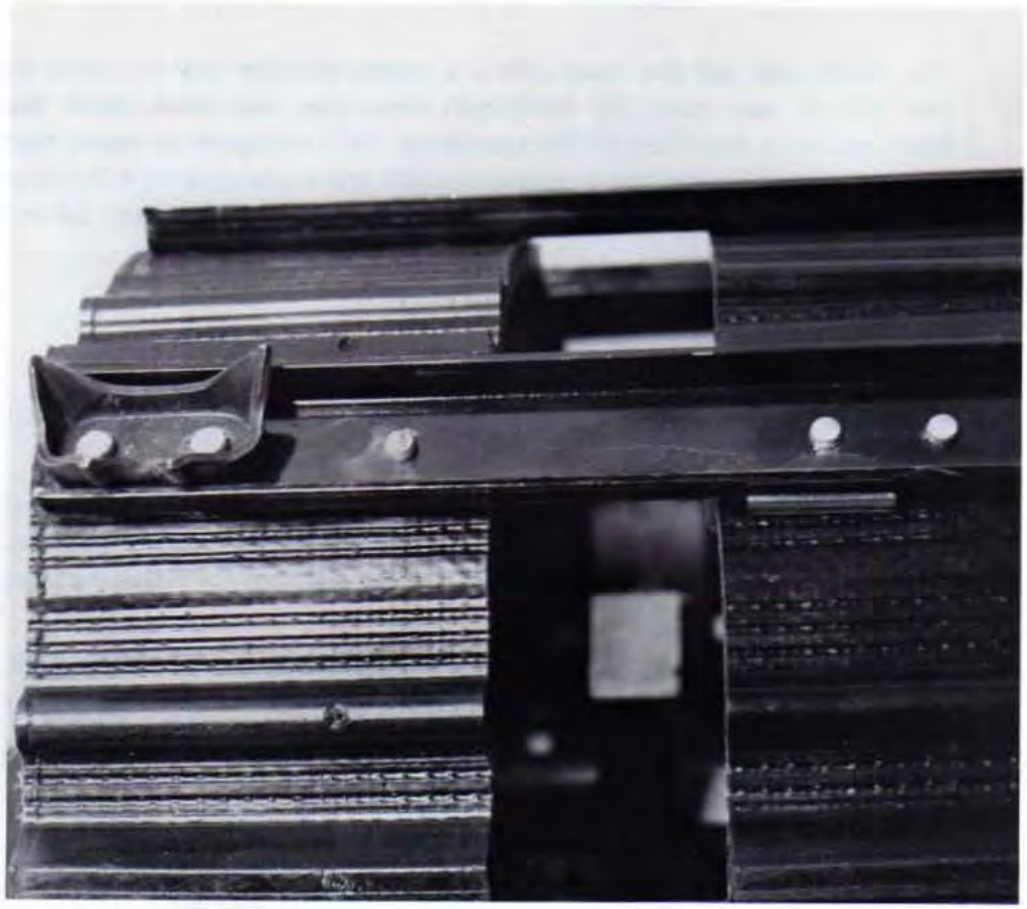

CAT TRACTION AND HANDLING

The finest tuned racing engine in the world is useless if it can't convert its power potential to motion. Just as automobile racers look to the super tires and boat racers look to the hot propellers, the snowmobile racer looks to the track and skis to convert his engine potential to speed. Careful attention to type of track, track studding and properly designed ski wear bars will insure the maximum use of available engine power. The time you spend in properly preparing your traction components for a race event will be rewarded with victory if you follow basic rules and learn the principles on which they are based. Through understanding the principles you will be able to make the necessary adjustments for different types of race tracks and different weather conditions, thereby maintaining your competitive edge.

CAT TRACTION: STUDS

Racing traction means studs. Below are five principles which can be used to get the most traction out of your studs.

1. **Sharpness counts more than number.**

   Fewer sharp, fresh studs work much better than a great many dull studs with a few new ones thrown in. Replace dull studs, don't try to add a couple new ones to "freshen them up".

(2.) Too many studs is worse than too few.

Too few studs will give some traction, though it will waste some of your engine's performance through slippage. Too many studs will cause your sled to "float" rather than hook up and waste even more of your engine's speed potential. And too many studs can also cause difficulty in turning by overcoming the effectiveness of your wear bars. The right number of studs hook up to use all your engine's acceleration potential, yet still let you turn.

(3.) Use studs which are designed to do a specific job best.

Some studs have side points to give the sled side bite. Others have just front points for aggressive acceleration. Still others have other characteristics that make them specially effective under certain track or weather conditions. Know your stud characteristics and use the stud designed for your particular need.

(4.) Place studs where weight will be concentrated.

Acceleration-type studs should be placed in the center of the track because they are aggressive. Square, four-pointed studs that give side bite should be placed at the edge of the track to assist in turning.

(5.) Stud to suit your riding style.

The best way to determine this is to stud up and test it. Compare several patterns for acceleration and cornering. The fastest way around a corner is to drive around rather than slide around. Properly set up, the sled will give maximum acceleration and still permit driving around the corner with a minimum of sliding.

STUDS FROM ARCTIC

Arctic Cat Claws — Part No. 0134-859

Cat Claws are four-cornered, hardened steel studs which are designed to resist spin-out and give maximum turning ability. They are held on the track with one bolt and locking nut and should be placed within the track cleats (grauser bars).

Arctic Super Claws — Part No. 0134-912

Super Claws are directional (one-sided) studs designed for maximum acceleration. They are held on with two bolts and locking nuts and should also be placed within the cleat (grauser bar). They mount with the aggressive edge of the stud to the rear, that is, so the pointed edge hits the ground first as the track turns. Because they are extremely aggressive, too many Super Claws can overcome any wear bar effectiveness and cause severe turning problems.

Cat Claws

Super Claws

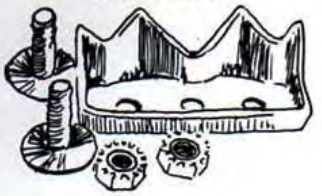

Carbide Claws

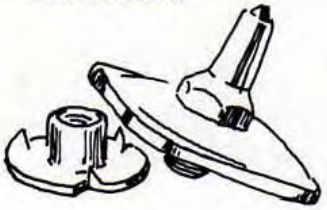

Arctic Carbide Stud Claws (Super Studs) — Part No. 0134-939

Arctic Carbide Claws have a single, chisel-shaped point of carbide on a conical, steel prong. They are designed for running on a course which has an ice base. Frozen dirt with rocks will cause the carbide piece to break. Carbide studs are fastened with a special retainer and may be placed anywhere on the track (belt or cleat) once the track is drilled out to size. Carbide studs may be sharpened for greater performance if the chisel-shaped cutting edge is maintained.

CAT CONTROL: WEAR BARS

Once you can accelerate to racing speeds your next need is to control that speed through a corner. Basically, cornering is the ability to enter corner one and exit corner two with the least possible delay.

In the early days of snowmobile racing, every racer had his own cornering tricks. Some drove hard into the first corner, banked themselves off the wall, straightened up and exited corner two. Others dragged a leg. Still others got to the inside and banked off their competition. But as sophistication crept into snowmobile racing, sharpened wear bars replaced tricks, and eventually someone put pieces of carbide in their bars to improve performance. This was the real beginning of cornering in snowmobile racing.

There are three basic principles to follow in checking your wear bars:

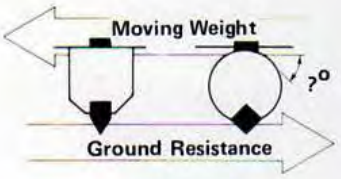

ONE: **Sharp edges dig. Dull edges don't.**

Carbide must be sharp to cut through frozen earth, yet this same frozen earth dulls the carbide very quickly. The more efficiently your bar handles and transmits turn pressures, the better you go around a corner, and the more your carbide dulls. Keep your wear bars sharp.

TWO: **Turn forces try to roll a wear bar off its edge.**

Centrifugal force created by turning will be pushing your wear bar over and trying to make it run on its side. Use flat backed wear bars and keep them bolted **tight** to your ski.

THREE: **Carbide will both chip and wear, but it works best.**

Carbide, as it is used in wear bars, is actually a combination of two elements: carbide (which chips but resists wear) and cobalt (which wears quickly but resists chipping). Different grades of carbide are made by varying the percentage of each, but it is impossible to have both excellent wear resistance and excellent chip resistance.

ARCTIC CAT CARBIDES

Arctic Cat Carbides have been developed through years of racing experience and designed specifically for your ski. The 61° carbide pieces start you out

at the sharpest edge legally available. A small gap is allowed between each insert and collectively these small gaps act like a serrated knife blade. Each insert digs into the frozen earth. Cat Carbides have a flat back host bar which is fitted with studs which match the holes in your ski. It's a very simple matter to tighten the flat backed bar snugly to your ski and therefore minimize wear bar roll over. Finally, the carbide formulation in your Cat Carbide bar has been developed through years of experimenting at the race track, and has been selected to give you the best of long wear and resistance to impact.

WEAR BAR MAINTENANCE

Worn Pieces – Because frozen earth will dull any sharp edge, your carbide wear bars will need to be harpened. A hand sharpening stone is available from KALAMAZOO ENGINEERING. TWO CAUTIONS in sharpening your carbide wear bar: ONE – Be sure to get a straight and even edge. This will make your steering easier. TWO – Do not remove any more carbide than is necessary to get an edge, as this will just shorten the life of your bar.

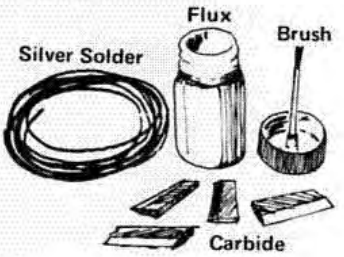

Replacing Carbide Inserts – Whether through chipping, breakage or just plain wearing out, eventually you'll need to replace your wear bars. You can buy a complete new set and bolt them on. Or you can use your existing host bar and just buy an Arctic Carbide Replacement Kit (Part No. 0134-897). If you choose the kit, proceed as follows:

Using a torch, heat the wear bar. AVOID heating the bar too hot because it will remove the strength from the carbide inserts and the host bar. When the bar starts to turn red hot (about 1200°), remove worn insert with a pair of pliers. Let bar cool and clean the groove. Brush the groove with flux from the kit and insert the new carbide piece. Heat the bar again and touch the silver wire to the carbide so it just flows along the edge of the carbide. Heat just enough to bond the insert to the bar.

THE PERFORMANCE SET-UP

To illustrated proper set-up we'll use a 34 cleat, 1975 Z Model El Tigre track as an example. The principles illustrated here will apply to all other high performance Cat tracks.

Before studding, remember: Locating the studs in the cleats makes the weight of the sled push directly on the stud points. This results in deeper penetration and better hookup. Mounting the stud on the belt gives less penetration. The weight goes through the cleat to the belt and finally to stud.

The following set-up, Pattern No. 1, is a good starting point.

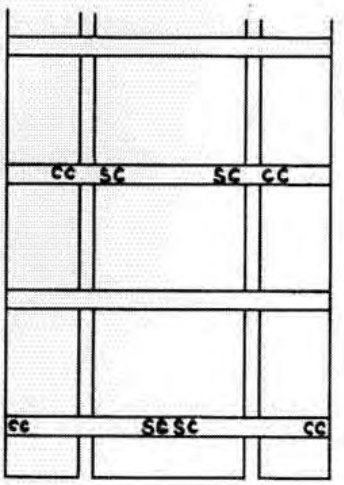

Pattern No. 1

Pattern No. 1 is an all-purpose set-up. The Super Claws (sc) in the center of the track give straight ahead dig for acceleration. Notice they are an equal distance from the center within the cleat yet not in the same spot on every

cleat. This staggering inside and outside establishes a broad base of traction. Studs placed in a row, that is, on the same spot on every cleat, would dig a trench instead of moving the snowmobile.

Cat Claws (cc) are placed on the outside of the track to resist centrifugal force on turns. Notice they are also staggered on an inside-outside pattern.

Start your testing with this pattern. It can be a bench mark for comparing modifications and a good point of return if changes don't improve your traction.

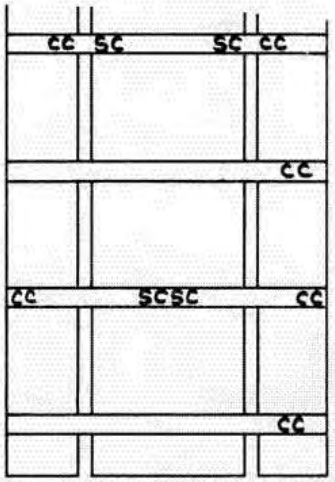

Pattern No. 2

Pattern No. 2 is provided as a suggestion for modification or as a starting point for a more experienced racer.

In this set-up extra Cat Claws have been placed on the right side of the track. This causes a tractional imbalance which tends to turn the sled left and helps you get around a corner easier. The effect can be magnified even more by using Super Claws instead of Cat Claws on the right side. The principle of "if a little does a little good then a lot must do super good" DOES NOT apply here at all. You must experiment to get the right number of studs in the right place to match **your** style of driving.

The secret of proper studding is to consider what you will need from your sled to meet the weather conditions and type of track you're faced with. Then apply the basic stud principles to create a studding pattern to answer those traction needs. For example, on a course with very short corners you might try using Super Claws PLACED BACKWARDS ON THE LEFT SIDE OF YOUR TRACK. The aggressive edge to the front would give you extremely good braking so you could hit the corner flying; yet the edge to the front would not significantly reduce your acceleration coming out of the corner.

Studding is all a matter of applying the principles and experimenting. DON'T FORGET: The right number of sharp studs of specific design placed where the weight will be concentrated is the key to **your** best studding pattern.

CAT TRACTION AND CONTROL SUMMARY

With engines even, proper track and ski set-up can provide a considerable performance advantage. Sharp, flat-backed wear bars for maximum turn carve and a custom stud pattern of sharp, well-designed studs to give you acceleration down the straightaways and let you drive through the corners will make you competitive in any race you enter.

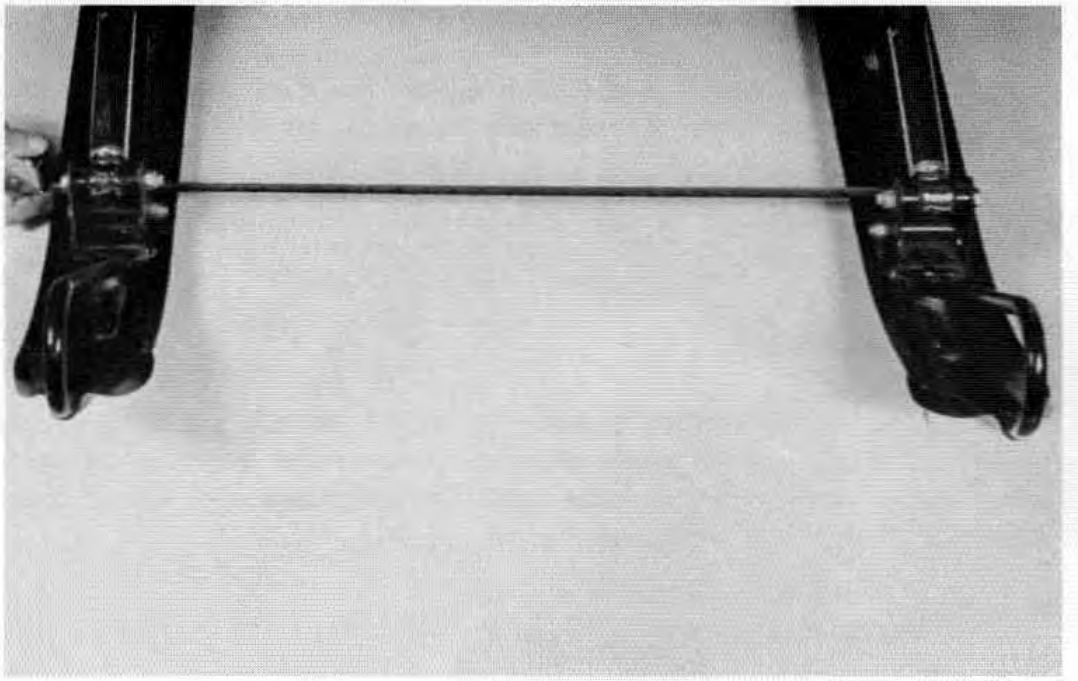

TRACK TENSION; TRACK AND SKI ALIGNMENT

VICTORY CAN DEPEND ON SETTING AND MAINTAINING CORRECT TRACK TENSION AND ALIGNMENT OF TRACK AND SKIS . . . CHECK AND CORRECT ALL THREE REGULARLY

TRACK TENSION:

Correct track tension is essential to maximum performance and handling of your racing snowmobile. A too-loose track will absorb horsepower and affect the function of your suspension as well as cause damage to cleats and chassis by allowing the track to scrape the inside of the chassis tunnel. A too-tight track will increase pressure on the skid frame and front drive sprockets and could result in rapid wear and damage to drive sprockets, rear idler wheels and hi-fax slides.

Procedure:

- Raise the rear of the snowmobile off the shop floor, making sure the track is free to rotate.
- Grasp the track at the midpoint of the slide rails and pull down slightly. Correct tension adjustment will allow the track to be pulled away from the hi-fax a distance of 3/4 to 1 inch.
- If adjustment is necessary to obtain proper tension, turn track tension adjusting bolts (clockwise to increase tension, counterclockwise to decrease tension) until proper tension is achieved.

NOTE: Both track tension adjusting bolts must be adjusted EQUALLY.

- When proper tension is obtained, tighten the track tension bolt jam nuts against the frame to assure security of adjustment.
- Adjustments to track tension can affect track alignment – alignment must be checked after adjustments are made to track tension.

TRACK ALIGNMENT:

Track alignment, like track tension, is critical to top performance. A misaligned track wastes power and adversely affects handling of your snowmobile. Misalignment can also cause damage to rear idler wheels, drive sprockets, chassis, skid frame and the track itself.

Procedure:

- Raise the rear of the snowmobile off the shop floor, making sure the track is free to rotate.
- Start the engine and open the throttle enough to make the track turn several revolutions.
- Shut the engine off and allow the track to coast to a stop. DO NOT APPLY BRAKE when performing this procedure as use of the brake may produce an inaccurate indication.
- Correct alignment is indicated by an equal distance from the rear idler wheels to the edge of the internal drive lugs on both sides of the track. If the track runs off-center, adjust the track tension adjusting bolts (tighten bolt on the side track runs to or loosen bolt opposite) until correct alignment is obtained.

Track tension and alignment are interrelated; always perform both adjustments, even when only one seems necessary.

- When proper alignment is indicated, double-check the track tension and tighten adjusting bolt jam nuts against the frame member.
- Track alignment must also be checked under actual operating conditions. Recheck alignment and tension after a field test to insure proper adjustment.

SKI ALIGNMENT:

Accurate ski alignment is necessary for accurate handling and operator safety. Skis that are out of alignment will require different amounts of rider effort for right and left turns and generally create an imprecise steering and handling situation that will make accurate turning near impossible and affect the self-centering function.

Procedure:

- Correct ski alignment is indicated when the skis are **exactly parallel.** Alignment is measured from outside ski edge to outside ski edge at points just in front of the rear spring mount and just behind front ski mount. Absolutely no "toe-in" or "toe-out" should be indicated.

- If alignment is incorrect, both tie rod ends must be removed from the spindle arms to adjust to correct alignment.
- Position skis straight ahead and establish a parallel relationship by measuring as in step one above and line handlebars up in straight-ahead position.
- Rotate the tie rod end until the mounting holes line up with the hole in the spindle arm. Secure the tie rod end to the spindle arm. Tighten cap screw and lock nut to 35 ft-lb of torque. Repeat procedure on the other tie rod end and spindle arm assembly.

Caution: All nuts, bolts and tie rod ends must be undamaged and tightened securely to insure maximum rider safety. Loose or deformed parts could result in serious injury from loss of control in high speed operation.

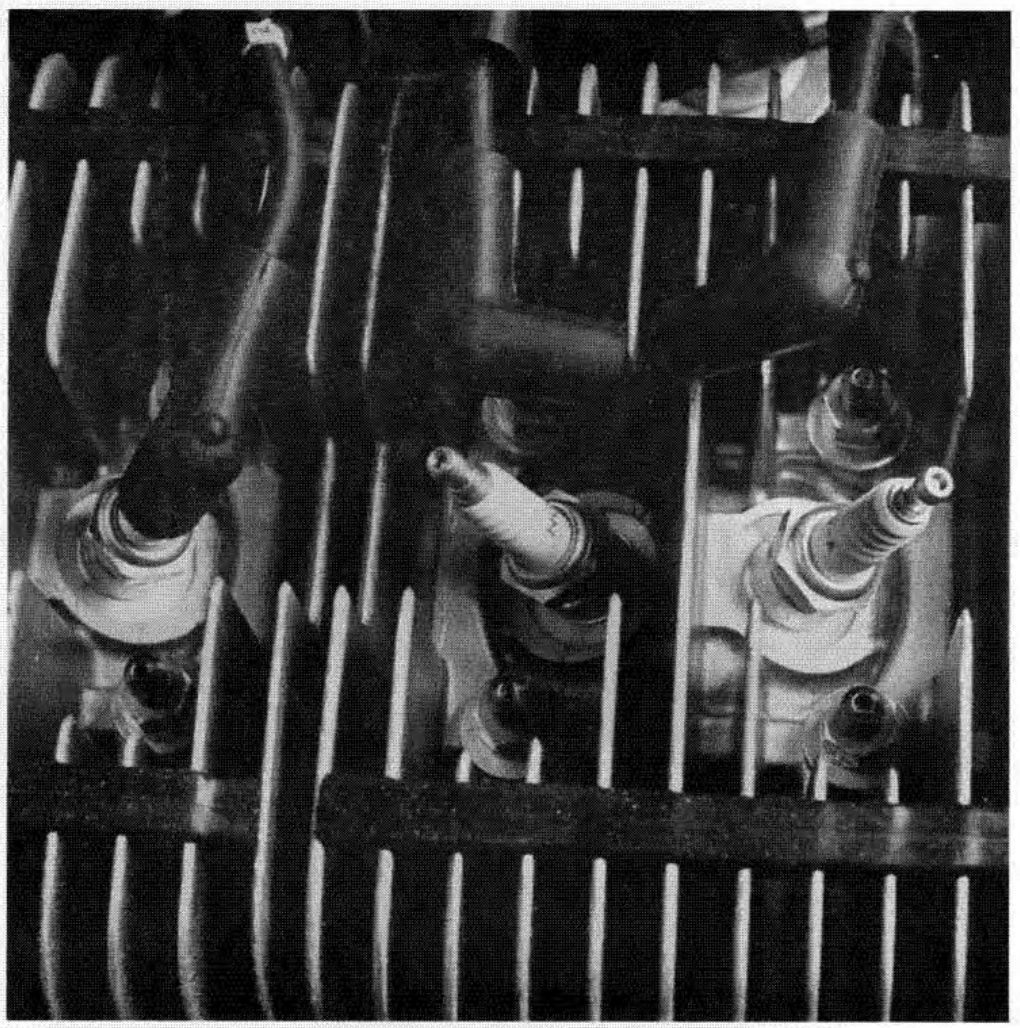

HOW TO READ YOUR SPARK PLUGS

THE PROPER INDICATION CAN VARY SOMEWHAT . . . LEARN TO RECOGNIZE A GOOD PLUG

Because spark plugs are screwed right into the combustion chamber of your engine, they are "closest to the action" and can tell you plenty about the condition and performance of the two main factors of combustion: Fuel mixture and ignition.

The appearance of the firing end of your spark plug can clue you to problems better than any other indicator if you know what to look for. The sharp competitor watches his plug condition carefully and practices making adjustments to achieve the proper plug appearance.

Included in this manual is a colored chart on spark plug firing-end appearances. This chart is intended to assist you in correctly choosing the right spark plugs and to determine the performance condition of the engine.

INCOMPLETE COMBUSTION IS SHOWN BY A DARK, SOOTY AND/OR OILY SPARK PLUG

Spark plugs exhibiting wet or carbon deposited plug ends as shown in Figures 1 thru 5 are generally due to these causes:

See spark plug chart.

1. Using too large a main jet and excessive choking.

2. Excess amount of oil in fuel mixture or trouble within the ignition system.

3.4.5. Using plugs with too high or low heat value and plug end does not reach self-cleaning temperatures.

OVERHEATING AND TOO-HIGH TEMPERATURES ON THE COMBUSTION CHAMBER ARE SHOWN BY PALE OR SPOTTED DEPOSITS AND MELTED OR BURNED ELECTRODES

Spark plugs exhibiting pale deposits and spotted or flaky deposits on center insulator and/or deformed electrodes as shown in Figures 6 thru 10 are generally due to these causes:

See spark plug chart.

a. Carburetor jets too small.

b. Not enough or wrong oil mixture.

c. Too hot a type of plug.

d. Ignition timing advanced too far.

e. Overheating conditions causing preignition.

6. The plug has been subjected to a relatively heavy load and evidence of overheating can be seen in the oxidized electrodes and melted deposits which have formed on the insulator surface.

7 The plug has been subjected to relatively heavy loads. Evidence of overheating appears in the oxidized electrodes becoming thinner and smaller.

8. The plug has been subjected to a relatively heavy load and evidence of overheating can be seen in the oxidized electrodes and melted deposits which have formed on the insulator surface.

9. Overheated plug with melted electrodes.

10. Overheated plug with melted electrodes and blistered porcelain insulator surface.

OPTIMUM PERFORMANCE TEMPERATURE RANGE

See spark plug chart.

Good spark plug indications generally fall into the categories of light brown or light grayish-brown color and a minimum of deposit buildup.

Figures 11 thru 16 show plug ends with engine timing, carburetor jetting, oil mixture and fuel-air ratios adjusted correctly.

A good thought to remember is that the plugs you receive with the engine are usually manufactured for that particular unit.

11.-16. The condition of the spark plug firing-end is considered to be good.

The plug reading will determine the carburetor jetting that was in effect JUST PREVIOUS to engine shut-off. To test Pilot Air system run at idle to 1/4 throttle, to test Jet Needle run at 1/4 to 3/4, to test Main Jet run wide-open throttle, etc. KILL ENGINE WITH SHUT-OFF SWITCH WITH THROTTLE IN TEST POSITION TO ASSURE ACCURACY OF READING.

THE PLUGS YOU RECEIVE WITH YOUR Z ARE MADE FOR THIS APPLICATION. SWITCHING TO OTHER BRANDS AND/OR HEAT RANGES WILL COMPLICATE YOUR SPARK PLUG DIAGNOSIS.

Learn to work with the stock NGK plugs in the heat ranges provided in their plug series while you set up and tune your racing snowmobile for competition. A little practice at plug diagnosis during this critical pre-season testing time will make last-minute and between-heat changes to carburetion easier and more positive. Remember, when referring to the color pictures showing the various plug conditions, that these example plugs were made in engines with problems in the fuel and ignition systems only. Factors such as improper gearing, plugged air silencer, blown or leaking gaskets and crankcase seals can all result in similar indications that cannot be corrected by changes to ignition or carburetion. An important part of plug diagnosis is the ability on the part of the tuner/racer to take the performance of the machine (just previous to the plug check) into account when he checks plug condition.

EFFECTIVENESS OF SPARK PLUG READING IS DETERMINED BY THE TUNER . . . NOT THE SPARK PLUG OR ITS CONDITION!

VICTORY IN THE STOCK-MODIFIED CLASSES

This section of the Arctic Cat Competition Manual is designed to assist competitors who wish to race in classes where modifications to stock engines, carburetion and drive train are allowed. Rules and regulations will vary from association to association . . . knowing the rules at the track is **your** responsibility.

Modifications in this section are detailed for engine, carburetion and drive clutch. See the appropriate chapters in the Stock and Super-Modified sections for information pertaining to gearing, suspension set-up, traction and handling.

MODIFICATION OF STOCK ENGINES FOR RACING
IS TRICKY BUSINESS . . . IF YOU ARE NOT
TOTALLY FAMILIAR WITH THE TERMS,
INFORMATION AND SPECIFICATIONS INCLUDED HERE,
DON'T MODIFY!

The following pages include set-up information and specifications for the modification of the stock El Tigre Z model for racing in "Mod-Stock" and other classes where internal engine and drive train modifications are legal. The procedures outlined here are **suggested methods only**. The interpretations placed on this material and the actual performing of the modifications can only be YOUR RESPONSIBILITY.

The terms and procedures for modifying the stock Z are meant for the experienced racer/mechanic. If you are planning to modify your Z to race in these classes and are not totally familiar with the terms and procedures used in the following explanations, it is strongly recommended you take this material to qualified engine shops and/or tuners to have the work performed.

MODIFICATION CHART FOR 1975 EL TIGRE Z MODELS

Modification	T7C250FR2	T7C340FR2	T7C440FR2
Displacement	245	339	436
Cyl. Head Volume (cc)	9.5	13.5	16.5
Cyl. Head Squish Angle	13°	9°	8°
Compression (PSI)	145 to 160	145 to 160	145 to 160
Std. Compression Ratio	8-8	8-4	7-6
Bore (mm)	51	60	68
Stroke (mm)	60	60	60
Exhaust Port Height (°ABDC)	97°	99°	99.5°
Transfer	64.5°	66.0°	64.5°
Bottom of Intake (°ATDC)	81°	81°	86°
Crankcase Modification	No	No	Yes
Piston Type	Std. w/o Boost Port	Std. w/o Boost Port	Std. w/o Boost Port
BTDC @ 6000 RPM Ignition Timing	12°	14°	17°
Spark Plug	NGK B10 EVA	NGK B10 EVA	NGK B10 EVA
Spark Plug Gap	.20	.20	.20
Carburetor	2-Mikuni 34mm	2-Mikuni 38mm	2-Mikuni 40mm
Jet Kit	P/N 6505-165	P/N 6505-166	P/N 6505-167
Clutch Kit	P/N 0146-248	P/N 0146-249	P/N 0146-250
Sprocket Ratio	15-39	18-35	19-35
Clutch Engagement	7000	6000	5500
Clutch Top RPM	9000	9200	9200

ENGINE MODIFICATION: MODIFICATIONS TO CARBURETION AND CLUTCHING DEPEND ON A PROPERLY MODIFIED ENGINE . . . DO IT RIGHT AND DO IT COMPLETELY

CYLINDER HEAD VOLUME

Cylinder head volume (in cc) listed in the Modification Chart are the same as stock for the 250 and 340. Modification is required to conform the 440 to modified specifications. PROCEDURE: .020" must be milled from the heads on the 440 to achieve 16.5 cc cylinder head volume. The 8° squish angle in the head must be maintained and must also be milled to maintain clearance. Check also that the original combustion chamber diameter (68mm) is maintained after the machine work is completed.

COMPRESSION (PSI)

A good compression gauge is a quick and reliable reference to determine engine condition in each cylinder. The Modification Chart lists the compression as 145 to 160 PSI and any reading within this range is acceptable. A reading lower than 145 may indicate problems with rings or pistons as well as air leaks in gaskets or crankcase seals. A variance of more than 10 PSI between cylinders is acceptable, greater variances should be regarded as an indication of problems in the upper-cylinder area.

Note: All compression gauges do not read the same. For this reason, always use the same gauge when taking compression readings to assure an accurate diagnosis.

BORE/STROKE

No changes are called for in engine performance modification.

EXHAUST PORT HEIGHT A.B.D.C. (After Bottom Dead Center)

All cylinders and port sizes and placements can vary due to the casting methods used in manufacture. For this reason, the specifications for modifying the ports and port timing are given in degrees, rather than inches or mm. Exhaust port modification specifications are given on the Modification Chart for each engine.

Procedure: Modify exhaust port height to specifications listed on the Modification Chart and restore the chamfer on the port mouth with fine emery cloth to prevent the possibility of catching a ring. Chamfer surface must be smooth and even to insure proper port-open timing.

TRANSFER PORTS

No change to transfer ports is necessary, but it is recommended you check the ports for blockage and/or roughness from the casting process.

Procedure: Remove the cylinders and examine the inside port surfaces carefully. The port entry at the bottom of the cylinder may be polished, but care must be taken not to alter the shape of the port mouth as this will affect fuel flow through the transfer openings.

NOTE: See crankcase transfer (page 68) for more information on transfer alignment.

BOTTOM OF INTAKE PORT A.T.D.C. (After Top Dead Center)

Specifications for altering the timing of the bottom of the intake port are given on the Modification Chart. Do not change the width or height of the intake as a change in these dimensions will adversely affect low-end performance.

Procedure: Carefully remove metal from the bottom of the intake port until proper degree reading is achieved. Polishing of this and the other ports will improve performance, but care must be taken not to enlarge or reshape ports in the process.

CRANKCASE MODIFICATION

See page 68 for crankcase modification procedures. Note that this procedure is only necessary in modification of the 440. No performance gain is shown in the 250 and 340 with crankcase modification.

PISTON TYPE

No booster port specifications are listed at this time due to current mod-stock rules that do not allow tuned pipes and replacement cylinders. The booster port shows a very slight increase in the 340 and 440 with the stock barrels and pipes, but no improvement is noted in overall track performance. Removal of the bottom ring on the pistons will show a performance improvement, however, and this procedure should be followed.

IGNITION TIMING

Ignition timing for the 340 and 440 remains stock at 14° and 17°. Timing on the 250 must be altered to 12° for maximum performance with engine modifications.

Procedure: Refer to Ignition Timing, page 28.

SPARK PLUG

The spark plug listed on the Modification Chart will be required for maximum performance after engine modifications are completed. It is recommended that you stick with the NGK plug listed as this will help minimize the number of variables you will have to work with in tuning your modified engine for maximum performance.

CARBURETION MODIFICATION: CHANGES IN ENGINE BREATHING DUE TO MODIFICATION MUST BE MATCHED WITH CHANGES IN CARBURETION

Note: See pages 14 - 21.

All three engines have a recommended change of carburetors and a recommended jetting set-up to help you get a start on performance tuning. The carburetors and jetting listed in the charts below are based on using carburetors from Arctic Enterprises fitted with the internal float bowl vent for use with the Air Silencer Box. All of the suggested carburetor tuning is based on these carburetors when used with the Air Silencer Box and the tuning **will not be effective** if the Air Silencer system is removed.

Accurate and effective carburetor tuning depends on a thorough knowledge of the theory and procedures necessary in tuning the variable venturi Mikuni carburetor. Read the chapter on carburetion in Section II carefully before beginning performance tuning of your carburetors.

CARBURETOR MODIFICATION TUNING CHART

250cc El Tigre Z (Modified)

CARBURETOR BODY:	34mm Mikuni
NEEDLE JET:	PO
JET NEEDLE:	6DH4
PILOT JET:	30
MAIN JETTING KIT:	Kit Part Number 6505-165 (Main Jets 280, 300, 340, 360)

340cc El Tigre Z (Modified)

CARBURETOR BODY:	38mm
NEEDLE JET:	QO
JET NEEDLE:	6DH4
PILOT JET:	30
MAIN JETTING KIT:	Kit Part Number 6505-166 (Main Jets 400, 420, 460, 480)

440cc El Tigre Z (Modified)

CARBURETOR BODY:	44mm Mikuni
NEEDLE JET:	AA5
JET NEEDLE:	7DHA
PILOT JET:	35
MAIN JETTING KIT:	Kit Part Number 6505-167 (Main Jets 420, 440, 460, 500)

DRIVE SYSTEM MODIFICATION: INCREASES IN HORSEPOWER AND CHANGES IN THE TORQUE OUTPUT MUST BE MATCHED WITH CAREFUL TUNING OF THE DRIVE SYSTEM

Note: See pages 69 - 71.

Read "Arctic Drive System" in Section II.

Maximum performance in racing classes where modifications to stock parts are legal will depend to a large degree on how well your drive system is set up to use the engine power. The clutch tuning kits listed in the charts below for each engine consist of stock Arctic Cat parts assembled to provide the range of clutch tuning that will be required to match up your clutching to your modified engine. The kits are assembled for engines modified according to the procedures outlined in Engine Modification in this Section of the book. If your engine is modified differently, further changes to clutching, and parts not in the kits listed, may be necessary for satisfactory drive system tuning.

Each component in the clutch has its own effect on performance. Engagement speed, RPM's through the shift pattern, backshift and top speed are all determined by characteristics of the ramps, weights and springs in the drive clutch. Read the chapter on the Arctic Cat Drive System in Section II carefully before beginning performance clutch tuning.

DRIVE CLUTCH MODIFICATION TUNING CHART

250cc – Kit Part No. 0146-248

Quantity	Part Number	Part	Remarks
3	0146-253	Ramps	Blank w/Heat Treat
*3	0146-228	Ramps	Cut for Modification Suggested
1	0146-068	Spring	Green
6	0146-226	Weights	1.5 Grams
6	0146-226	Weights	2.0 Grams
6	0146-159	Weights	2.5 Grams
6	0146-108	Weights	3.06 Grams
6	0146-175	Weights	3.73 Grams

340cc – Kit Part No. 0146-249

Quantity	Part Number	Part	Remarks
3	0146-253	Ramps	Blank w/Heat Treat
*3	0146-251	Ramps	Cut for Modification Suggested
1	0146-068	Spring	Green
6	0146-108	Weights	3.06 Grams
6	0146-175	Weights	3.73 Grams
6	0146-135	Weights	4.48 Grams

440cc — Kit Part No. 0146-250

Quantity	Part Number	Part	Remarks
3	0146-253	Ramps	Blank w/Heat Treat
*3	0146-252	Ramps	Cut for Modification Suggested
6	0146-175	Weights	3.73 Grams
1	0146-068	Spring	Green
6	0146-135	Weights	4.48 Grams
6	0146-107	Weights	4.96 Grams
6	0146-106	Weights	5.96 Grams

***NOTE: Ramps cut for engine modifications suggested. Begin tuning clutch with these ramps in place and postpone cutting blank ramps until needed ramp changes are clearly indicated.**

Procedure: Replace drive spring and install the "suggested ramp" to begin clutch set-up. The range of weights included in the kit should be utilized to familiarize yourself with the engagement and shift characteristics of each set-up under variable snow conditions encountered at the track.

Caution: Never set up to run faster than 9500 RPM continuously. A condition where 10,000 RPM occurs momentary may be noted in the first lap under certain conditions, even with the proper set-up. This is an allowable condition, but never tune clutches to allow engine RPM over 9500 in normal racing operation.

VICTORY IN THE MODIFIED AND SUPER-MODIFIED CLASSES

This section of the Arctic Cat Competition Manual is designed to assist competitors who purchase the 1975 Mod Kit to set their Z up for modified racing. The parts in the Mod Kit quality in most racing associations as "modified" parts and rules and regulations governing the kitted Z may vary slightly from association to association . . . knowing the rules at the track is **your** responsibility.

Assembly, specifications and set-up instructions pertaining to the Mod Kit are detailed in this section. See the appropriate chapters in the Stock and Stock-Modified sections for information pertaining to carburetion tuning, traction and handling, clutch set-up and ignition.

THE EL TIGRE Z MOD KIT IS A COMPLETE MODIFICATION SYSTEM ENGINEERED TO DELIVER THE PERFORMANCE TO WIN IN MODIFIED ENGINE CLASSES

MOD KIT COMPONENT PARTS LIST

Description	Qty.	Kit Part No. 0134-917 T7C250	Kit Part No. 0134-918 T7C340	Kit Part No. 0134-919 T7C440
Cylinder	2	3001-547		
Cylinder (1)	1		3001-549	3001-552
Cylinder (2)	1		3001-550	3001-553
Head, Cylinder	2			3001-551
Gasket	2	3001-548	3001-166	3001-094
Gasket, Cylinder	2	3001-100	3001-100	3001-100
Gasket, Exhaust	2	3001-099	3001-099	3001-099
Pipe Exhaust	2	3001-269	3001-269	3001-269
Piston Set	2	3001-508	3001-161	3001-162
Ring, Snap	4	3000-151	3000-151	3000-151
Insulator	2	3001-103	3001-103	3001-270
Gasket, Carburetor	2	3000-338	3000-338	3000-338
Washer	8	3000-116	3000-116	3000-116
Nut	8	3000-255	3000-255	3000-255
Washer, Spring	8	3000-106	3000-106	3000-106
Nut	8	3000-765	3000-765	3000-765
Washer, Spring	8	3000-766	3000-766	3000-766
Nut	4	3000-098	3000-098	3000-098
Washer	4	3000-102	3000-102	3000-102
Exhaust Chamber No. 1	1	0112-283	0112-285	0112-287
Exhaust Chamber No. 2	1	0112-284	0112-286	0112-288
Spring Exhaust Pipe	4	0123-321	0123-321	0123-321
*Clutch Kit Racing	1	0146-248	0146-249	0146-250
Carburetor	2	0170-069	0160-070	0170-071
*Jet Kit, Carburetor	1	6505-165	6505-166	6505-167
Throttle Cable	1	0187-012	0187-014	0187-016
Flange w/Clamp Carb	2	0109-465	0170-034	0170-034
Handle Throttle Control	1	0109-523	0109-521	0109-522
Spring, Wire Formed	1		0107-235	
Sprocket 18 Tooth	1		0107-341	

***Check Carburetor and Clutch Section for breakdown of kits.**

The modification kit designed for the 1975 El Tigre Z is an owner-installed kit containing high-performance replacement components made to fit the stock Z model as delivered. The various parts — cylinders, pistons, carburetors, exhaust system and installation hardware — are all **specifically designed** for racing applications. No added machine work or modification will be required* to make your mod-kitted Z a competitive racer in the modified and "super-modified" racing classes.

The competitiveness of your mod-kitted Z will depend on two things: First, the kit itself must be carefully and completely installed to provide the proper performance — matching of each component for maximum performance characteristics. Second, the modified Z must be carefully set up and tuned to deliver all the power, responsiveness and traction it is capable of.

1975 MOD KIT ENGINE SPECIFICATIONS

Engine	T7C250FX	T7C340FX	T7C440FX
No. of Cylinders	2	2	2
Displacement (cc)	245	339	436
Cylinder Head Volume (cc)	9.5	13.5	16.5
Cylinder Head Squish Angle	.13°	.9°	.8°
Compression Ratio	7-7	7-9	7-6
Compression (PSI)	145-160	145-160	145-160
Bore (mm)	51	60	68
Stroke (mm)	60	60	60
Piston Type	One L Ring w/o Boost Port	One L Ring w/Boost Port	One L Ring w/Boost Port
Piston Ring Side Play	.002" to .005"	.002" to .005"	.002" to .005"
Piston Ring End Gap	.006" to .014"	.006" to .014"	.008" to .016"
Piston Skirt Clearance	.0026" to .0041"	.0030" to .0045"	.0033" to .0049"
Ignition Type	Dual Std. - CDI	Dual Std. - CDI	Dual Std. - CDI
BTDC @ 6000 RPM Ignition Timing	12°	14°	17°
Spark Plug	NGK B10 EV	NGK B10 EV	NGK B10 EV
Spark Plug Gap	.016" or Factory Recommendation	.016" or Factory Recommendation	.016" or Factory Recommendation
Cylinder Head and Crankcase Torque	20 Ft/Lb	20 Ft/Lb	20 Ft/Lb
Fuel Mixture Ratio	20 - 1 (90 Octane Min.)	20 - 1 (90 Octane Min.)	20 - 1 (90 Octane Min.)

*Crankcase modification is required in the kitted 440.

CRANKCASE MODIFICATION: THE CRANKCASE TRANSFER OPENINGS MUST BE ALTERED TO MATCH THE MAIN TRANSFER PORTS IN THE MOD KIT CYLINDERS IN THE 440 ONLY

Altered port size and position in the Mod Kit cylinders supplied in the 440cc engine kit makes a port-matching procedure necessary to obtain correct fuel flow and velocity in the transfer ports. This matching procedure is not necessary in the 250 and 340cc crankcases.

PROCEDURE:

- Remove cylinders and draw a vertical line from the top of the transfer opening to the bottom, using a scribe and straight edge.
- Remove metal from the port opening with porting tools until a match between the crankcase and cylinder transfer port is obtained.
- A slightly more accurate method of determining the amount of crankcase metal to be removed requires that the cylinders be placed on the top half of the crankcase. The correct matching can then be determined by using the cylinder port opening as a guide when scribing the lines on the crankcase.

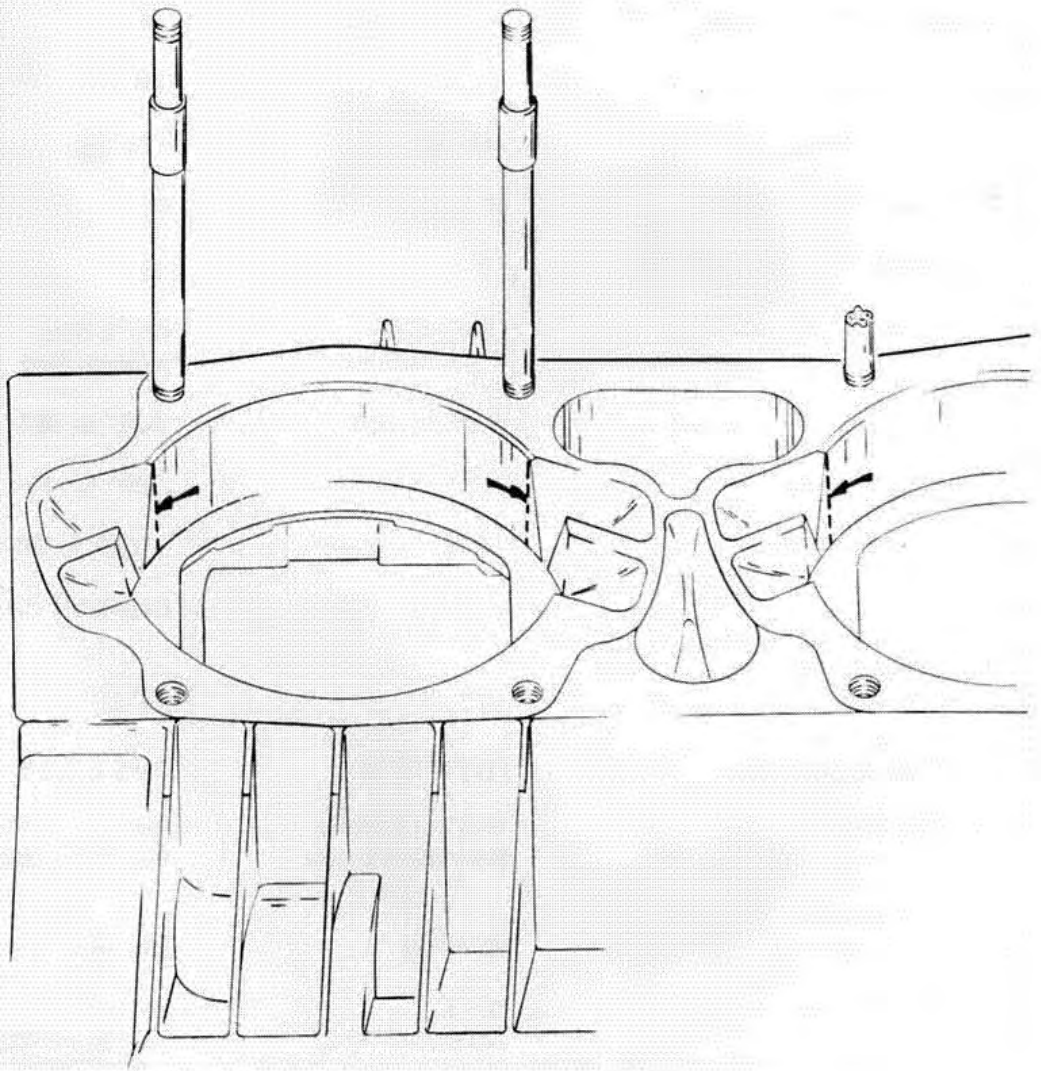

1975 MOD KIT SPROCKET GEARING RATIO CHART

Sprockets	Ratio	Chain Pitch	Approximate MPH Under Ideal Conditions
15-35	2.33	66	78
15-39	2.60	68	70
16-35	2.19	66	83.2
16-39	2.44	70	74.7
17-35	2.06	68	88.5
17-39	2.20	70	79.3
18-39	2.17	70	84
19-35	1.84	68	98.8
19-39	2.05	70	88.7
20-35	1.75	68	104
20-39	1.95	70	93.4
21-35	1.67	70	109
21-39	1.86	72	97.4
22-35	1.59	70	114.5
22-39	1.77	72	102.75

NOTE: Top speeds listed in this chart are based on engine RPM of 9500 with a 1-to-1 clutch ratio, using a 1975 Arctic Cat drive and driven clutch.

Some suggested chain pitches are long or short because this is all that is available at this time. You will have to make changes to chain and tensioners according to the gearing chosen. The gearing chart is supplied AS A GUIDE ONLY, care must be taken when gearing is changed to maintain proper chain tension.

See page 41 for recommended tensioner combinations.

FORMULA TO CALCULATE TOP SPEED CAPABILITY

MPH = Engine RPM at 1:1 Ratio X Number of Teeth **on Small Sprocket** / Number of Teeth on Large Sprocket X .0192

DRIVE CLUTCH RAMP MODIFICATION: RAMP CONTOUR IS THE MAIN FACTOR IN DETERMINING THE PERFORMANCE CHARACTERISTICS OF YOUR CLUTCHING AND SHIFT PATTERN

This year blank clutch ramps, Part No. 0146-253, are available from Arctic Enterprises for the purpose of grinding custome ramps for racing. Effective ramp cutting depends on a thorough understanding of how ramp contour changes drive system performance. Read "Arctic Drive System" on page 31 in its entirety before you attempt ramp cutting for your racer.

A Ramp Holder for grinding, Part No. 0144-095, is a must for accurately grinding your custom ramps. The tool holds the three ramps equally so each ramp is ground the same. Variations in ramps will upset the dynamic balance of your drive clutch, causing loss of performance and vibration that can cause major failure of the clutch and crankshaft. Ramp grinding is not for the amateur . . . ramps must be ground with extreme care and precision.

CLUTCH RAMP CONTOUR VARIABLES

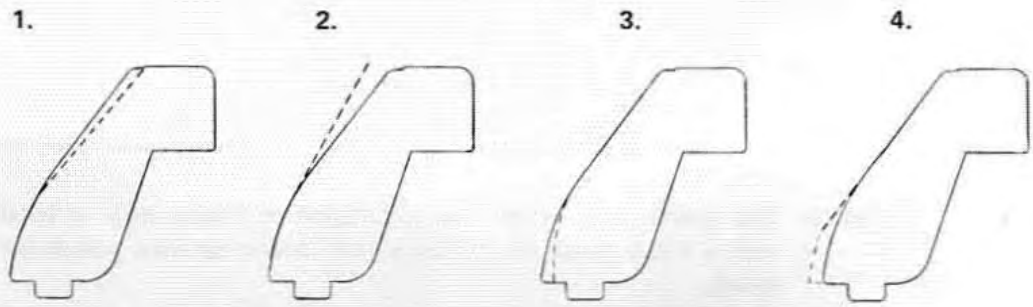

See "Arctic Drive System" in Section II.

Figure 1. Ramp cut back at top more than stock ramp. Engine will run lower peak RPM with same weights and spring.

Figure 2. Ramp not cut back as far as stock ramp. Engine will run higher RPM with the same weights and spring.

Figure 3. Ramp cut back at bottom more than stock ramp. Engagement speed will increase when using same weights and spring.

Figure 4. Ramp bottom not cut back as far as stock ramp. Engagement speed will decrease when using the same weights and spring.

CLUTCH WEIGHTS AVAILABLE FROM ARCTIC ENTERPRISES

	Part No.	Outside Diameter	Weight in Grams	Clutch Kit Part No.	Weight Color Code
Light	0146-227	0.400 In.	1.0 Alum.		N/A
	0146-225	0.463 In.	1.5 Alum.	0146-248	N/A
	0146-226	0.521 In.	2.0 Alum.	0146-248	N/A
	0146-159	0.377 In.	2.5	0146-248	White
	0146-108	0.406 In.	3.058	0146-248/249	Yellow
	0146-175	0.437 In.	3.725	0146-248/249/250	Red
	0146-135	0.471 In.	4.479	0146-249/250	Black
	0146-176	0.500 In.	4.675		Green
	0146-107	0.491 In.	4.958	0146-250	White
	0146-279	0.511 In.	5.457		Black
	0146-106	0.530 In.	5.958	0146-250	Red
	0146-278	0.549 In.	6.475		Black
	0146-123	0.568 In.	6.992		Yellow
	0146-105	0.598 In.	7.858		Black
	0146-136	0.644	9.27		Green
	0146-104	0.665	9.75		White
Heavy	0146-166	0.684	N/A		Red

CLUTCH RAMPS AVAILABLE FROM ARCTIC ENTERPRISES

Part No.	cc	Clutch Kit
0146-228	250	0146-248
0146-251	340	0146-249
0146-252	440	0146-250

SUSPENSION ADJUSTMENTS FOR MODIFIED RACING: NO MODIFICATIONS REQUIRED, JUST CAREFUL AND THOROUGH TUNING

See "Suspension" on pages 42 - 45.

Arctic Cat's new 1975 Z model suspension is a newly-designed high-performance system that can be set up to match your kind of riding and your kind of race. No special modification for setting up for modified racing exists at this time. Your particular set-up will be determined by factors of snow conditions, studding and carbides, rider weight, rider style, track layout and others. Read "Suspension System for 1975" in Section II carefully before beginning suspension set-up.

1975 MOD KIT CARBURETOR SPECIFICATIONS AND PARTS LISTS

Engine Model	T7C250FX	T7C340FX	T7C440FX
Carb Setting No.	VM 34-65 P/N 0170-069	VM 40-5 P/N 0170-070	VM 44-6 P/N 0170-071
Main Jet (Low Alt. Avg.)	No. 320 P/N 6505-074	No. 440 P/N 6505-126	No. 480 P/N 6505-149
Main Jet (High Alt. Avg.)	No. 290 P/N 6505-123	No. 400 P/N 6505-124	No. 430 P/N 6505-146
Air Jet	Without	Without	Without
Jet Needle	6DH4-3 P/N 6505-003	7DH2-3 P/N 6505-097	7DH2-3 P/N 6505-097
Needle Jet	P-O-166 P/N 6505-007	BB-O-224 P/N 6505-182	BB-5-224 P/N 6505-180
Cut Away	No. 2.0 P/N 6505-183	No. 2.0 P/N 6505-179	No. 2.0 P/N 6505-179
Pilot Jet	No. 30 P/N 6505-073	No. 30 P/N 6505-073	No. 30 P/N 6505-073
ByPass Hole	1.4°	1.4°	1.4°
Pilot Outlet	0.4°	0.7°	0.7°
Air Screw	1.0 Turn	1.0 Turn	1.0 Turn
Valve Seal	1.5°	1.5°	1.5°
Starter Jet	1.5°	1.5°	1.5°
Fuel Level*	22 ± 1.0mm	17.9 ± 1.0mm	17.9 ± 1.0mm
ByPass Pitch	3.75 ± 0.1mm	4.5 ± 0.1mm	4.5 ± 0.1mm
Main Jet Washer	VM20/169	VM20/169	VM20/169
Fuel Pump	2 of DF52 21/001	2 of DF52 21/001	

* **Fuel Level: Fuel level actual distance between bore center and fuel level but dimension is height dimension from float chamber gasket surface to float arm when mixing chamber body is upside down and float chamber gasket is removed.**

High altitude is defined as over 5,000 ft.

Key:

° – Diameter mm

See "Carburetion" on pages 14 - 24.

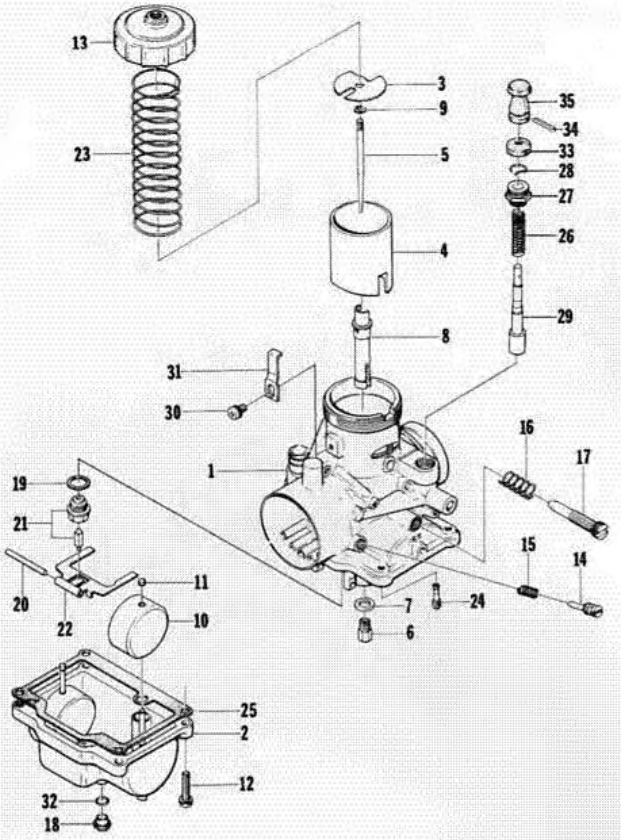

VM 34 - 65 Carburetor

Assy. Part No. 0170-069 (250cc)

*Not a Serviceable Part

Ref. No.	Part No.	Qty.	Description
1	*	1	Mixing Body Assy.
2	6505-189	1	Float Chamber Body Assy.
3	6505-001	1	Plate
4	6505-183	1	Piston Valve CA2.0
5	6505-003	1	Jet Needle
6	6505-074	1	Main Jet No. 320
7	6505-006	1	Washer
8	6505-007	1	Needle Jet P-O 166
9	6505-008	1	E-Ring
10	6505-009	2	Float
11	6505-010	2	Cap
12	6505-014	4	Screw w/Spring Washer
13	6505-018	1	Top, Mixing Body
14	6505-019	1	Screw, Pilot Air
15	6505-020	1	Spring, Pilot Air
16	6505-021	1	Spring, Throttle Stop
17	6505-204	1	Screw, Throttle Stop
18	6505-184	1	Screw, Drain

Ref. No.	Part No.	Qty.	Description
19	6505-024	1	Washer
20	6505-153	1	Pin, Float
21	6505-160	1	Needle Valve Assy. 1.5
22	6505-027	1	Arm, Float
23	6505-031	1	Spring, Piston Valve
24	6505-073	1	Pilot Jet No. 30
25	6505-030	1	Gasket
26	6505-083	1	Spring, Starter Plunger
27	6505-205	1	Holder, Guide
28	6505-084	1	Spring Clip
29	6505-082	1	Plunger, Starter
30	6505-036	1	Screw w/Spring Washer
31	6505-186	1	Plate
32	6505-185	1	O Ring
33	6505-086	1	Cap, Rubber
34	6505-088	1	Pin
35	6505-089	1	Starter Knob

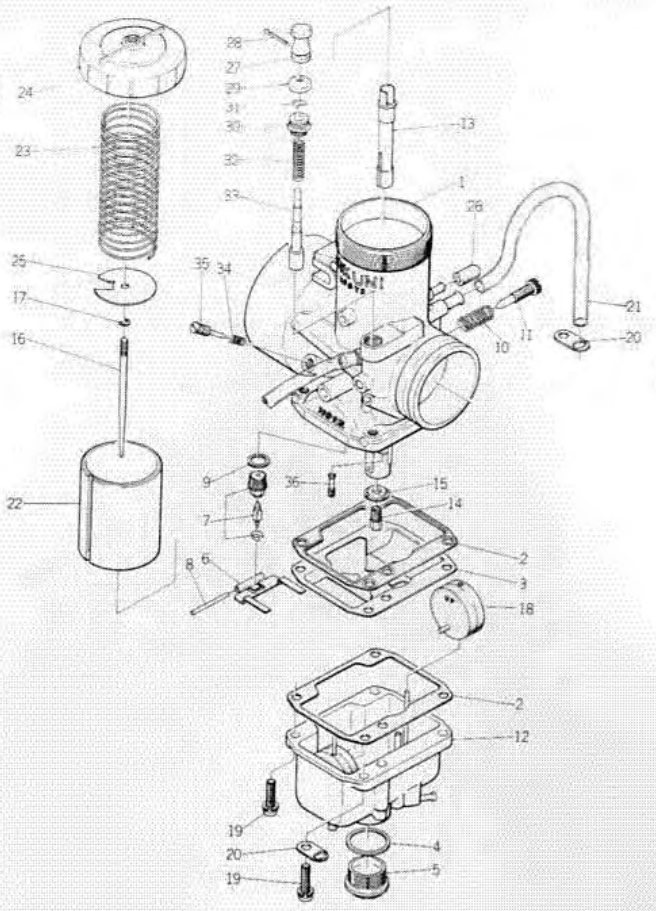

VM 40 - 5 Carburetor

Assy. Part No. 0170-070 (340cc)

*Not a Serviceable Part

Ref. No.	Part No.	Qty.	Description
1	*	1	Mixing Body Assy.
2	6505-197	2	Gasket
3	6505-202	1	Baffle Plate
4	6505-106	1	Washer
5	6505-105	1	Screw, Drain
6	6505-104	1	Float Arm
7	6505-175	1	Needle Valve 1.8
8	6505-153	1	Pin, Float Arm
9	6505-102	1	Washer
10	6505-021	1	Spring, Throttle Stop
11	6505-101	1	Screw, Throttle Stop
12	6505-100	1	Float Chamber Body Assy.
13	6505-182	1	Needle Jet BB-O (224)
14	6505-126	1	Main Jet, No. 440
15	6505-006	1	Washer
16	6505-097	1	Jet Needle 7DH2
17	6505-096	1	E-Ring
18	6505-049	2	Float

Ref. No.	Part No.	Qty.	Description
19	6505-195	4	Screw w/Spring Washer
20	6505-094	2	Plate
21	6505-118	2	Tube, Air Vent
22	6505-179	1	Piston Valve CA2.0
23	6505-091	1	Spring, Piston Valve
24	6505-200	1	Top, Mixing Chamber
25	6505-087	1	Plate
26	*	1	Cap
27	6505-089	1	Knob, Starter Valve
28	6505-088	1	Pin
29	6505-086	1	Rubber Cap
30	6505-085	1	Cap, Starter Valve
31	6505-084	1	Spring, Clip
32	6505-083	1	Spring, Starter Valve
33	6505-082	1	Starter Valve
34	6505-020	1	Spring, Air Screw
35	6505-019	1	Screw, Pilot Air
36	6505-073	1	Pilot Jet, No. 30

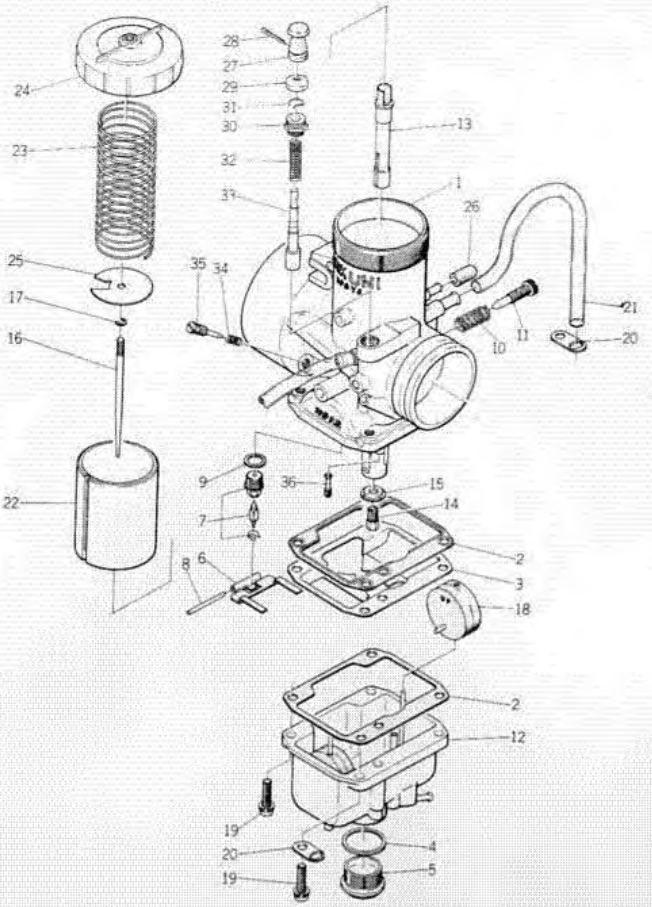

VM 44 - 6 Carburetor

Assy. Part No. 0170-071 (440cc)

*Not a Serviceable Part

Ref. No.	Part No.	Qty.	Description
1	*	1	Mixing Body Assy.
2	6505-197	2	Gasket
3	6505-202	1	Baffle Plate
4	6505-106	1	Washer
5	6505-105	1	Screw, Drain
6	6505-104	1	Float Arm
7	6505-176	1	Needle Valve 2.0
8	6505-153	1	Pin, Float Arm
9	6505-102	1	Washer
10	6505-021	1	Spring, Throttle Stop
11	6505-204	1	Screw, Throttle Stop
12	6505-100	1	Float Chamber Body Assy.
13	6505-180	1	Needle Jet BB-5 (224)
14	6505-149	1	Main Jet, No. 480
15	6505-006	1	Washer
16	6505-097	1	Jet Needle 7DH2
17	6505-096	1	E-Ring
18	6505-049	2	Float

Ref. No.	Part No.	Qty.	Description
19	6505-195	4	Screw w/Spring Washer
20	6505-094	2	Plate
21	6505-118	2	Tube, Air Vent
22	6505-179	1	Piston Valve CA2.0
23	6505-091	1	Spring, Piston Valve
24	6505-200	1	Top, Mixing Chamber
25	6505-087	1	Plate
26	*	1	Cap
27	6505-089	1	Knob, Starter Valve
28	6505-088	1	Pin
29	6505-086	1	Rubber Cap
30	6505-085	1	Cap, Starter Valve
31	6505-084	1	Spring, Clip
32	6505-083	1	Spring, Starter Valve
33	6505-082	1	Starter Valve
34	6505-020	1	Spring, Air Screw
35	6505-019	1	Screw, Pilot Air
36	6505-073	1	Pilot Jet, No. 30

UPDATING EARLIER ARCTIC CATS FOR MODIFIED RACING

This section of the Arctic Cat Competition Manual is designed to assist competitors who wish to update their 1972-3 EXT, Formula II or 1973-4 El Tigre for modified racing in the 1975 season. Arctic Enterprises does not suggest that the information in this section will be to your best advantage or that the modifications included will bring your machine up to the level of the 1975 Z. This section is included for your information only and all changes to machine set-up and alterations must be made according to your own judgment.

The racing set-up information here is based on past racing experience with the models included and using parts available at that time for that model year. Some of the parts suggested are still available, some may be hard to locate. The 1975 Mod Kit and new racing accessories covered in the earlier section can be used on some earlier models but no data is available on such modifications.

Earlier models should be checked very carefully for wear and damage to engine, chassis and running gear before racing in the 1975 season for your safety.

UPDATING THE 1972 EXT:

While the 1975 Mod Kit does not fit the 1972 EXT because the new model has a completely different engine, the Mod Kit for 1974 will fit some 1972 models. The 1974 Mod Kit is still available in small quantities and it will bring your power up somewhat close to 1975 performance levels.

As always, however, the older the snowmobile, the more it will take to get the power up to new model levels. The information included here is not intended to mean that you will reach the performance level of the 1975 Z if you perform all the modifications listed, but if you intend to keep and race your 1972 EXT and improve performance for the 1975 season the following data will be helpful.

1972 EXT ENGINE SPECIFICATIONS BEFORE MOD KIT

1972 Model	T1A250R2	T1A290R2	T1A340R2	T1A400R2	T1A440R2	T3A440R2	T3A650R2
Displacement (cc)	245	290	339	398	430	435	644
No. of Cyl.	2	2	2	2	2	3	3
Bore	51mm	55.5mm	60mm	65mm	67.5mm	55.5mm	67.5mm
Stroke				60mm			
Retarded Timing		.005 or 5°			Must Be Set in Running Condition 4,000 RPM or Above		
Running Advanced Timing				.140 or 25°			
Ignition		Magneto			CDI	CDI	CDI
Point Gap		.014					
Compression Ratio	6.7-1	6.7-1	6.4-1	6.1-1	6.2-1	6.7-1	6.2-1
Lighting Coil			Yes			No	No

1972 EXT ENGINE SPECIFICATIONS AFTER MOD KIT INSTALLATION

Mod Kit P/N	134-890	134-889	134-887	134-887	134-887	None	None
New Engine Kit	T1C250	T1C295	T1C340	Change to T1C340	Change to T1C340		
Bore (mm)	51	56		60			
Stroke			60				
Cylinder Head Volume (cc)	9.3	11.1		13.3			
Cylinder Head Squish Angle	13.2°	13.2°		9°			
Compression Ratio	6.9-1	7.2-1		6.7-1			
Piston Type	For One "L" Type Ring with Labyrinth Grooves						
Piston Clearance (In.)	0.003 - 0.004						
Ring End Gap (In.)	0.006 - 0.012						
Ignition Timing BTDC at 6000 RPM	25°						

All crankcase and head bolts torque — 16 ft. lbs.

ADDITIONAL PARTS NEEDED FOR MOD KIT IN 1972 EXT

Mod Engine Kit	Parts Required	Quantity	Type	Part No.
Model T1C 250	Carburetor	2	VM 30-69	0170-058
	*Jet Kit	1	Mikuni	6505-141
	Fuel Pump	2	Mikuni	0109-600
	Throttle Cable	1	Arctic 73	0187-009
	Throttle Lever	1	Arctic 73	0109-487
	Throttle Handle	1	Arctic 73	0109-489
	Drive Clutch	1	Arctic 74	0225-042
	*Ramp Wt. Kit	1	Arctic 74	0146-230
	Driven Clutch	1	Arctic 75	0226-010
	Drive Belt	1	Arctic 74	0227-015
	Rubber Flange and Hardware	2	Arctic 73	0109-464

(Continued on Next Page)

ADDITIONAL PARTS NEEDED FOR MOD KIT IN 1972 EXT

Mod Engine Kit	Parts Required	Quantity	Type	Part No.
Model T1C 290	Carburetor	2	VM 36-11	0170-059
	*Jet Kit	1	Mikuni	6505-142
	Fuel Pump	2	Mikuni	0109-600
	Throttle Cable	1	Arctic 73	0187-013
	Throttle Lever	1	Arctic 73	0109-487
	Throttle Handle	1	Arctic 73	0109-510
	Drive Clutch	1	Arctic 74	0225-042
	*Ramp Wt. Kit	1	Arctic 74	0146-230
	Driven Clutch	1	Arctic 75	0226-010
	Drive Belt	1	Arctic 74	0227-015
	Insulator Block and Hardware	2	Arctic 73	3001-039
	Rubber Flange and Hardware	2	Arctic 73	0170-003
Model T1C 340	Carburetor	2	VM 36-11	0170-059
	*Jet Kit	1	Mikuni	6505-142
	Fuel Pump	2	Mikuni	0109-600
	Throttle Cable	1	Arctic 73	0187-013
	Throttle Lever	1	Arctic 73	0109-487
	Throttle Handle	1	Arctic 73	0109-510
	Drive Clutch	1	Arctic 74	0225-042
	*Ramp Wt. Kit	1	Arctic 74	0146-230
	Driven Clutch	1	Arctic 75	0226-010
	Drive Belt	1	Arctic 74	0227-015
	Insulator Block	2	Arctic 73	0109-462
	Hardware	4	Arctic 73	0123-518
	Rubber Flange	2	Arctic 73	0170-033
	Hardware	4	Arctic 73	0123-514, 515

*** – Jet Kit: Part No. 6505-141 (7 Sets) Sizes 170-230**
Part No. 6505-142 (9 Sets) Sizes 290-370

*** – Ramp Wt. Kit: Part No. 0146-230 Includes 1 Ramp, 6 Different Weights**

CD IGNITION CHANGE FOR 1972 EXT

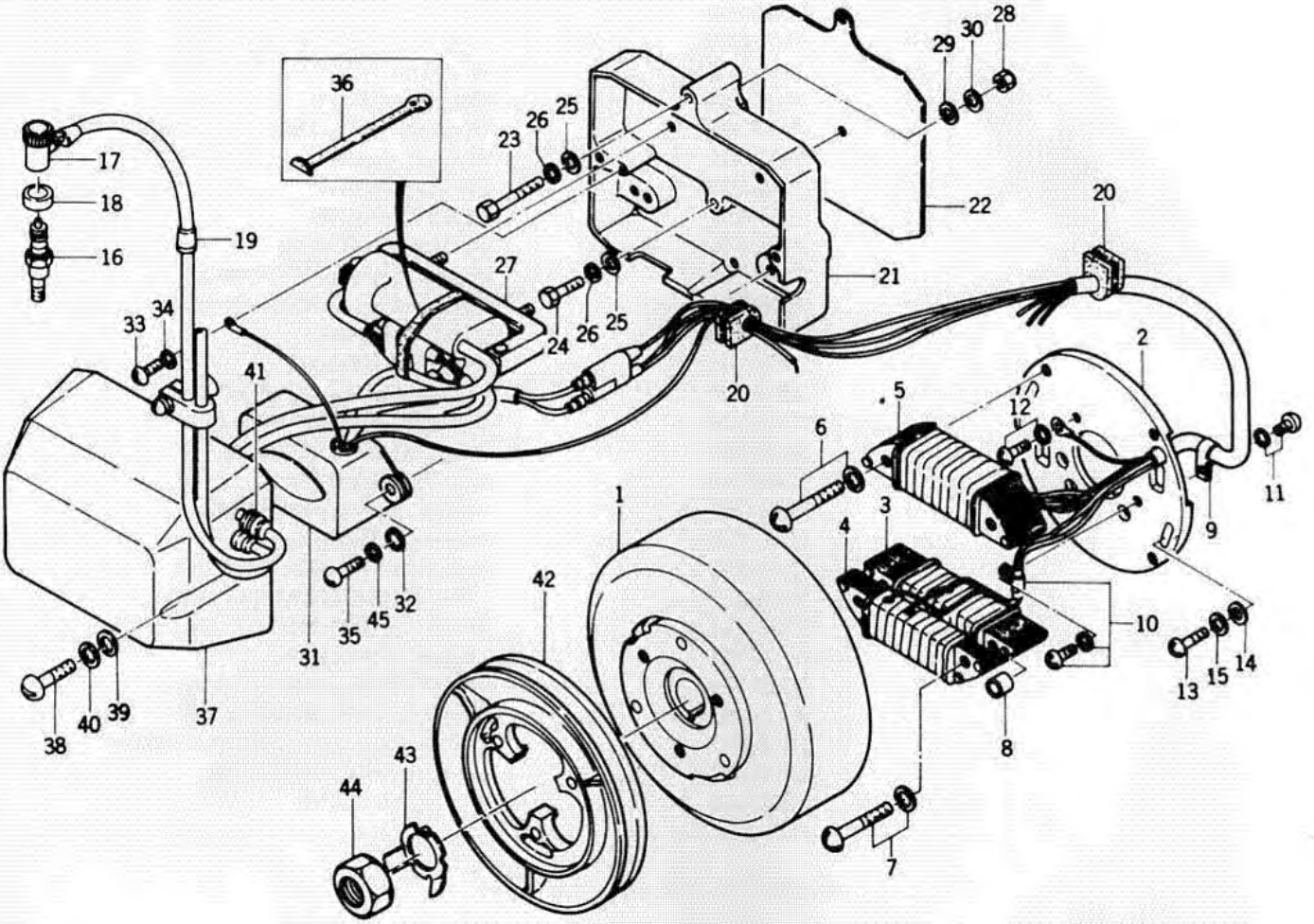

Ref. No.	Part No.	Qty.	Description
1-0	3000-285	1	Magneto Assy. (318861-8110-00) (1-15)
1	3000-287	1	Flywheel (318861-8111-00)
2-0	3000-288	1	Base Assy. (318861-8120-00) (2-15)
2	3000-289	1	Base (318861-8121-00)
3	3000-290	1	Coil Exiting (318861-8123-00)
4	3000-291	1	Coil Pulsing (318861-8125-00)
5	3000-292	1	Coil Lighting (318861-8124-00)
6	3000-293	2	Screw (318861-8132-00)
7	3000-294	2	Screw (318861-8133-00)
8	3000-295	2	Collar, Coil (318861-8115-00)
9	3000-296	1	Clip (318861-8138-00)
10	3000-297	1	Screw (318861-8448-00)
11	3000-298	1	Screw (318861-8446-00)
12	3000-339	1	Screw (318861-8447-00)
13	3000-299	2	Screw (214B0518A)

(Continued on Next Page)

CD IGNITION CHANGE FOR 1972 EXT

Ref. No.	Part No.	Qty.	Description
14	3000-260	2	Washer (411B0500)
15	3000-104	2	Washer, Spring (461F0500A)
16	0134-564	2	Plug, Spark - B10ES
17	3000-192	2	Cap, Plug (315120-8412-00)
18	3000-073	2	Cover, Cap (318401-8413-00)
19	3000-193	4	Grommet (318401-8415-00)
20	3000-194	2	Grommet (318801-8164-00)
21	3000-300	1	Bracket, Coil (318861-8472-00)
22	3000-301	1	Bracket, Insulator (318861-8473-00)
23	3000-302	1	Bolt (110B0648)
24	3000-303	1	Bolt (110B0628)
25	3000-101	2	Washer (410B0600)
26	3000-105	2	Washer, Spring (461F0600A)
27	3000-276	1	Coil Ignition (318861-8460-00)
28	3000-278	2	Nut (310B0600)
29	3000-101	2	Washer (410B0600)
30	3000-105	2	Washer, Spring (461F0600A)
31	3000-279	1	CDI Unit (318861-8465-00)
32	3000-280	2	Washer (318861-8466-00)
33	3000-246	1	Screw (214B0410A)
34	3000-262	1	Washer, Spring (461F0400)
35	3000-252	2	Screw (214B0625)
36	3000-197	1	Band, Coil (318801-8254-00)
37	3000-281	1	Cover, Coil (318861-8461-00)
38	3000-251	2	Screw (214B0616)
39	3000-101	2	Washer (410B0600)
40	3000-105	2	Washer, Spring (461F0600A)
41	3000-203	2	Grommet (318801-8165-00)
42	3000-282	1	*Pulley, Fan Drive (318861-1762-00)
43	3000-283	1	Washer (318861-8175-00)
44	3000-158	1	Nut (315B1800A)

* "Pulley, Fan Drive" for CDI unit is special part.

UPDATING THE 1973 EXT, 1973-74 EL TIGRE:

When updating the 1973 EXT and 1973-74 El Tigre, you may encounter problems with sprocket ratios, ramp contour and other equipment listed in the specifications that follow. This is a set-up and tuning problem that will have to be handled by the individual competitor.

UPDATE PROCEDURE

1. You should take the following steps to insure you are racing under the best safety conditions for your best interest and your fellow competitors. Remembering that the 1973 EXT is now two years old, perform the following steps:
   - Completely disassemble the entire snowmobile before the start of the racing season. Components to be removed are the engine, drive clutch, driven pulley and shaft, brake, chain and sprockets, seat, fuel tank, throttle cable and linkage, skid frame, track, skis and steering system.

- Clean the entire snowmobile chassis, using a good quality degreaser. Inspect all rivet areas and welds for loose or missing rivets, cracks or other damage that may be evident. Reinforce the tunnel if it is bent, cracked or otherwise damaged. If damage is excessive, replace the particular component(s). **Make sure the spindles and tie rods are not bent or cracked**; threaded areas must not be stripped. If any component is damaged beyond repair, replacement is recommended.
- After the complete snowmobile chassis is rebuilt, set it off to the side where accidental damage will not occur.
- Clean the entire engine, using a good quality degreaser.

2. Continue to assemble the engine, using the high performance mod kit components that are required for your particular cc size engine.

   When engine is assembled, set the ignition timing, see page 88, Engine Specifications 1974 Mod Kit.

   - The driven shaft and brake should now be installed.
   - Install sprocket on driven shaft and the track drive shaft. A new chain should be installed when new sprockets are used. Many different sprocket ratios can be used for various types of races. You will have to experiment with different sprocket ratios to obtain optimum performance.
   - Install automatic chain tensioner.
   - Install dropcase cover and gasket and fill with 8 ounces of Arctic Chainlube. For 1973 EXT, 1973 El Tigre and 1974 El Tigre', the Operator's Manual is to be used for recommended lubricant and amount to be added.
   - Install the engine in the snowmobile chassis and establish correct center-to-center distance between engine crankshaft and driven pulley shaft. When specified distance is obtained, secure engine in place.

     1972 EXT – Center-to-center distance is 13 inches.

     1973 EXT and El Tigre – Center-to-center distance is 11-5/8 inches.

     1974 El Tigre – Center-to-center distance is 11-3/8 inches.
   - Install exhaust manifold and tuned pipes on the engine.
   - Install fuel pumps (Part No. 0109-600). New fuel pump is recommended because check valve material and the method of mounting has been improved. Check valves will not curl up on the edges.
   - Install throttle cable, brake cable (if not already installed) and the choke cable (if engine is so equipped).
   - The new drive clutch (Part No. 0225-042) is recommended for racing. The clutch is to be disassembled and modified slightly for your performance needs. See page

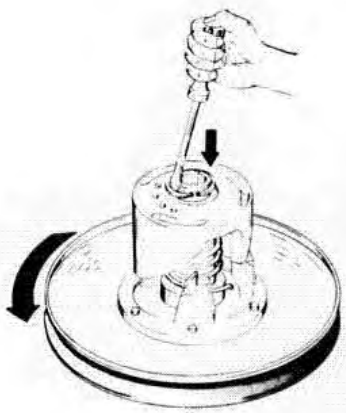

- The ramps and weights are the components that will need to be changed for the various cc sized engines.
- When the drive clutch is set up properly for your particular engine, install drive clutch on the engine crankshaft.
- The new balanced driven pulley (Part No. 0226-010) is recommended for racing.
- The bronze bushing is to be lubricated with low-temperature grease or LPS before installation and before each race. Any excess grease of lubricant is to be wiped off with a clean rag.
- Set driven pulley spring tension by using the number one hole; 1/3 turn or 120° wind will set the tension properly.
- Install driven pulley on driven shaft. Check the offset between the drive clutch and driven pulley, using the special tool (Part No. 0144-099). Shim as required to maintain proper offset (.380 inch).
- When driven clutch is set up properly, secure it to the driven shaft.
- Drive Belt Width — Before each race, examine the drive belt's condition. Specified drive belt width is 1-1/4 inches for all EXT or El Tigre models. When drive belt width decreases to approximately 1-1/8 inches, it is to be replaced.
- Drive Belt Outside Circumference — Specified outside circumference is:

  1972 EXT — 48-9/16 inches - 3/16 inch.

  1973 EXT and El Tigre — 46 inches - 3/16 inch.

  1974 El Tigre — 45-1/2 inches - 3/16 inch.
- To Install Belt:
  - A. Position the drive belt between the drive clutch sheaves.
  - B. Rotate the driven pulley moveable sheave rearward, while pulling toward the steering post.
  - C. Roll the drive belt onto the driven pulley.
- Clean fuel tank thoroughly and touch up all chipped paint surfaces or rusted areas. Sand affected area before painting.
- Install the fuel tank on the snowmobile chassis.
- Install new fuel lines, fuel line filters and fuel tank filter. Connect fuel lines to fuel tank fitting, fuel pump fittings and carburetor fittings.
- Install the seat cushion. Make sure all snaps are in place.

IMPORTANT SAFETY BULLETIN

Dear 1973 EXT Owner/Operator:

It has come to our attention that a problem may exist with the rectangular aluminum axle of the front end assembly on your EXT race machine.

If you have installed "ski spreaders" to your machine and have used it quite frequently over the past two years, there is a possibility that the rectangular axle may break, allowing the front end to collapse on one side of the machine. If this failure occurs, control of the machine is lost and a possible hazard to your safety and other competitors' safety exists.

Since race machines are used under many adverse conditions and receive severe use, it is imperative that a very close inspection be made of the machine before it is used for racing or otherwise. Special attention should be given to inspection of the front end assembly.

To protect yourself and others from possible injury, Arctic strongly advises the following action to be taken:

1. If ski spreaders **have never** been installed on your machine, you may continue to operate it. However, you must inspect the front axle assembly very closely to see if a crack has started near the spindle housing on the underside or front of the axle before each use. See illustration. Do NOT install ski spreaders.
2. If ski spreaders **have been** installed and used at any time on your machine, you must replace the aluminum front end with a steel front end. Aluminum front end assemblies are no longer available. There is approximately 13 lbs. weight difference, which does not greatly reduce machine performance. WE DO NOT RECOMMEND REINFORCEMENT OF ANY EXISTING ALUMINUM FRONT ENDS.
3. If your machine will be used for any endurance-type races, whether Oval, LeMans or Cross-Country, the aluminum front end must be replaced with a steel front end.

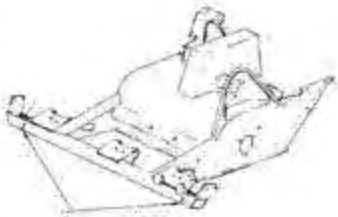

Inspect for possible cracks at front and underside of axle.

Since your EXT does not carry any warranty provisions and has been used for two race seasons, we must consider the replacement cost your responsibility. You will, however, be able to purchase a steel front end from an Arctic dealer at a reduced price. The new suggested list price for the steel front end is $36.53, which is a considerable cost reduction. Steel front ends are available.

Once again we stress upon you the importance of a very close examination of your machine before use. Please accept our advice and take the action necessary to insure a safe 1974-1975 race season. Thank you very much for your cooperation in this matter.

Yours very truly,

ARCTIC ENTERPRISES, INC.

Wayne Konickson

Wayne L. Konickson
Product Safety Manager

1973 EXT RACING UP-DATE INFORMATION

1974 MOD KIT

Engine	T7B295	T7B340	T7B440	T8B650
Mod Kit P/N	0134-888	0134-886	0134-885	0134-884
	Additional Parts Required			
Carburetors			VM44-5(2)	VM44-5(2)
			0170-050	0170-050
Throttle Cable			0187-016	0187-017
Throttle Handle			0109-522	0109-522
*Jet Kit	6505-142	6505-142	6505-143	6505-143
Insulator Block and Hardware			3001-103(2)	
Drive Clutch	0225-042	0225-042	0225-042	0225-042
*Ramp/Wt. Kit	0146-230	0146-230	0146-231	0146-232
Driven Clutch	0226-010	0226-010	0226-010	0226-010
Drive Belt	0227-012	0227-012	0227-012	0227-012
Engine Plate	0108-135	0108-135	0108-135	
Engine Oil Seal	3000-381	3000-381	3000-381	

*Jet Kit P/N 6505-141 7 Sets Sizes 170-230
P/N 6505-142 9 Sets Sizes 190-370
P/N 6505-132 9 Sets Sizes 420-500
Ramp/Weight Kit P/N 0146-230 3 Ramps 6 Weights (39 Pieces)
P/N 0146-231 3 Ramps 4 Weights (27 Pieces)
P/N 0146-232 3 Ramps 4 Weights (27 Pieces)

Note: (All of the above is less gear reduction unit.)
The 1974 mod kits' availability is limited to small quantities at Arctic Enterprises. They may be found at some distributors or dealers.

1975 MOD KIT

Engine	*T7B295	T7B340	T7B440	T8B650
Mod Kit Engine	T7C250FX	T7C340FX	T7C440FX	(N/A 1975)
Mod Kit P/N	3001-544	3001-546	3001-546	(N/A 1975)

* – T7B295 must be changed to new 1975 mod kit T7C250FX, T7C340FX or T7C440FX. There is no 295 mod kit for 1975.

Note: If the 1975 mod kit is installed on 1973 EXT, no performance figures are available. For installation of mod kit, read all information that pertains to 1975 Z model El Tigre under Section II Modification.

1974 ENGINE MOD KIT COMPONENTS

Description	Kit Part No. 3001-490 T8B650	Kit Part No. 3001-491 T7B440	Kit Part No. 3001-492 T7B340	Kit Part No. 3001-493 T1C340	Kit Part No. 3001-494 T7B295	Kit Part No. 3001-495 T1C295	Kit Part No. 3001-496 T1C250
Head, Cylinder	3001-513	3001-513	3001-514	3001-497	3001-515	3001-501	3001-505
Cylinder	3001-512	3001-509	3001-510		3001-511		
Gasket, Head	3001-094	3001-094	3001-166	3000-960	3001-165	3000-713	3000-658
Gasket, Cylinder	3001-100	3001-100	3001-100	3000-714	3001-100	3000-714	3000-714
Gasket, Exhaust	3001-099	3001-099	3001-099	3000-141	3001-099	3000-141	3000-141
Flange, Exhaust	3001-269	3001-269	3001-269		3001-269		
Piston Set	3001-429	3001-428	3001-427	3001-500	3001-426	3001-504	3001-508
Ring, Snap	3000-151	3000-151	3000-151	3000-151	3000-151	3000-151	3000-151
Gasket, Carb.	3000-338	3000-338	3000-338		3000-338		
Washer, Head	3000-116	3000-116	3000-116	3000-116	3000-116	3000-116	3000-116
Nut, Head	3000-225	3000-255	3000-225	3000-255	3000-225	3000-255	3000-255
Washer, Spring	3000-106	3000-106	3000-106	3000-106	3000-106	3000-106	3000-106
Nut, Exhaust	3000-256	3000-256	3000-256	3000-256	3000-256	3000-256	3000-256
Washer, Spring	3000-263	3000-263	3000-263	3000-263	3000-263	3000-263	3000-263
Nut	3000-098	3000-098	3000-098		3000-098		
Washer	3000-102	3000-102	3000-102		3000-102		
Insulator			3001-103		3001-103		3001-039
Cylinder (1)				3001-498		3001-502	3001-506
Cylinder (2)				3001-499		3001-503	3001-507
Gasket, Inlet				3000-654		3000-654	3000-654
Screw							3001-038
Piston Rings (Only) for Parts Replacement	3001-031	3001-028	3001-029	3001-029	3001-030	3001-030	3001-517

ENGINE SPECIFICATIONS WITH 1974 MOD KIT

Engine Model	T1C250	T1C295	T1C340	T7B295	T7B340	T7B440	T8B650
Number of Cylinders	2	2	2	2	2	2	3
Displacement (cc)	245	295	339	295	339	436	644
Bore (mm)	51	56	60	56	60	68	67.5
Stroke (mm)	60	60	60	60	60	60	60
Cylinder Head Volume cc	9.3	11.1	13.3	11.4	13.5	16.5	16.5
Cylinder Head Squish Angle	13.2°	13.2°	9°	9°	9°	7.9°	7.9°
Effective Compression Ratio	6.9:1	7.2:1	6.7:1	8.4:1	8.1:1	7.9:1	7.9:1
Production Method For Booster Port	Casted Without	← Forged Without		← Forged With →			
Piston Type	← For One "L" Type Ring with Labyrinth Grooves →						
Piston Clearance (In.)	← 0.003 - 0.004 →			← 0.004 - 0.005 →			
Ring End Gap (In.)	← 0.006 - 0.012 →					← 0.008 - 0.014 →	
Ignition Timing BTDC at 6000 RPM	25°	25°	25°	14°	12°	17°	17°
Ignition System	← Low Tension CDI →			← Low Tension CDI, Dual Spark Plug →			
Fuel Mixture Ratio	20.1	20.1	20.1	20.1	20.1	20.1	20.1
Cylinder Head Torque	16 Ft. Lbs. — 16 Ft. Lbs.						
Crankcase Torque	16 Ft. Lbs. — 16 Ft. Lbs.						
Flywheel Torque	60 Ft. Lbs. — 60 Ft. Lbs.						
Maximum Engine Operating Temp.	425°F. — 425°F.						

TUNED PIPE MODIFICATION: PROPER ENGINE PERFORMANCE DEPENDS ON A CORRECTLY MODIFIED EXHAUST SYSTEM

Mod Kit-equipped engines must be equipped with a modified tuned pipe for maximum performance. Figure shows the dimensions that must be maintained for the engines listed to insure proper performance. The pipe is to be cut at 5° angle on the head cone to make the turn. All dimensions given in the chart accompanying Figure are in inches . . . **do not vary from these dimensions.** Measure all dimensions along center line of pipe as shown in Figure

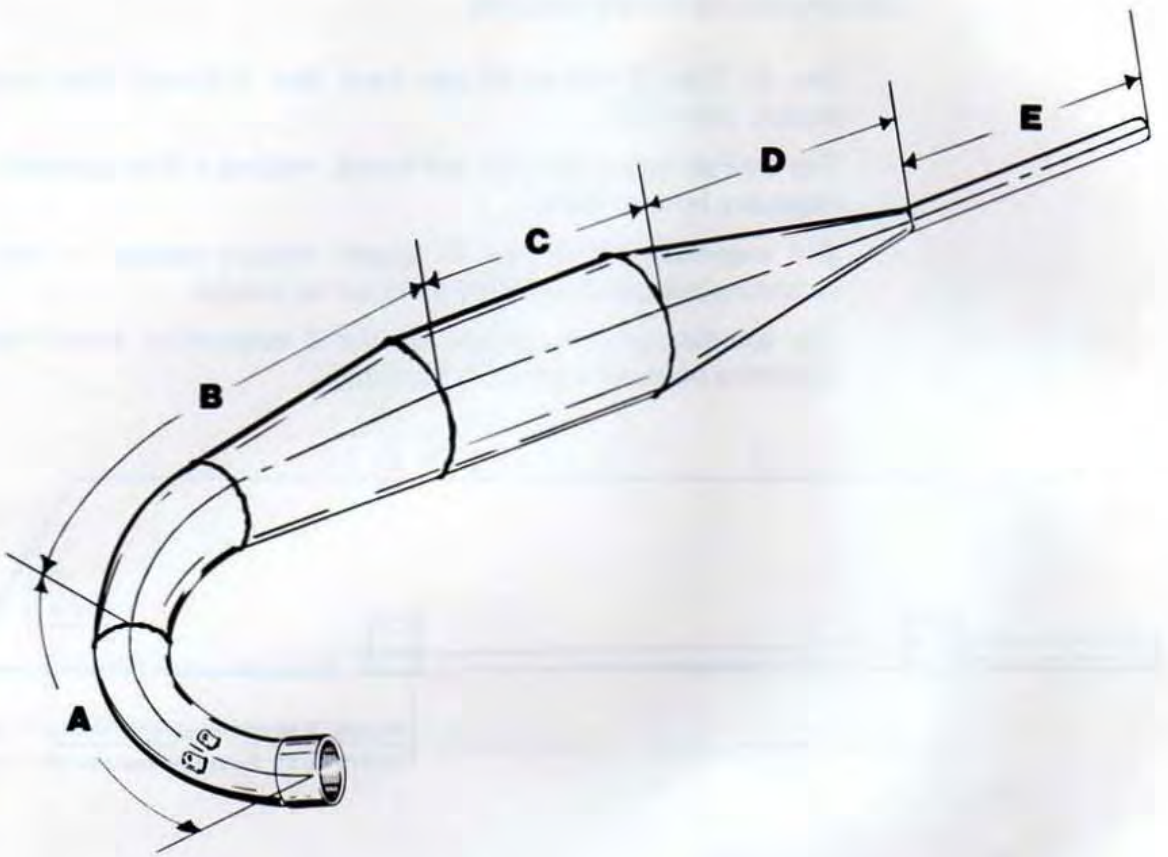

Model	A	B	C	D	E	Comments
T1C 250RX	9 1/4	14 1/2	7	8	11 3/4	
T1C 295RX	9 1/4	15 1/4	4	9 3/8	12	Same as T7B 295RX
T1C 340RX	8 1/2	15	7	9 1/2	11 3/4	
T7B 295RX	9 1/4	15 1/4	4	9 3/8	12	
T7B 340RX	8	15 1/4	6 1/2	9 1/2	12	
T7B 440RX	9	15 1/4	6	11	8	Same as T8B 650RX
T8B 650RX	9	15 1/4	6	11	8	

SUSPENSION UPDATE: IT'S POSSIBLE TO UPDATE EARLIER MODELS WITH THE NEW Z SUSPENSION BUT THE IMPROVEMENT DEPENDS ON YOUR SLED SET-UP

Changes to the new Z suspension can be accomplished in the 1972-73 EXT and 1973-74 El Tigre with changes to mounting positions, sprocket drive assembly and installation of a new Z track in some cases. Because it is impossible to take into account the many different machine set-ups and racing styles, Arctic Enterprises does not intend to say the Z suspension will result in an improvement on your machine. Updating your machine to 1975 Z suspension parts is **your** decision, but if you decide to do it this information will assist you.

Z SUSPENSION DIFFERENCES

- The El Tigre Z has an all-new track that is shorter than most older models (15x111).
- The shorter track also has less cleats, making a drive sprocket change necessary in most cases.
- The suspension is shorter in length, making changes in skid frame mounting positions necessary in all earlier models.
- The spindle width is greater on the Z suspension, which makes the mounting position a factor in handling.

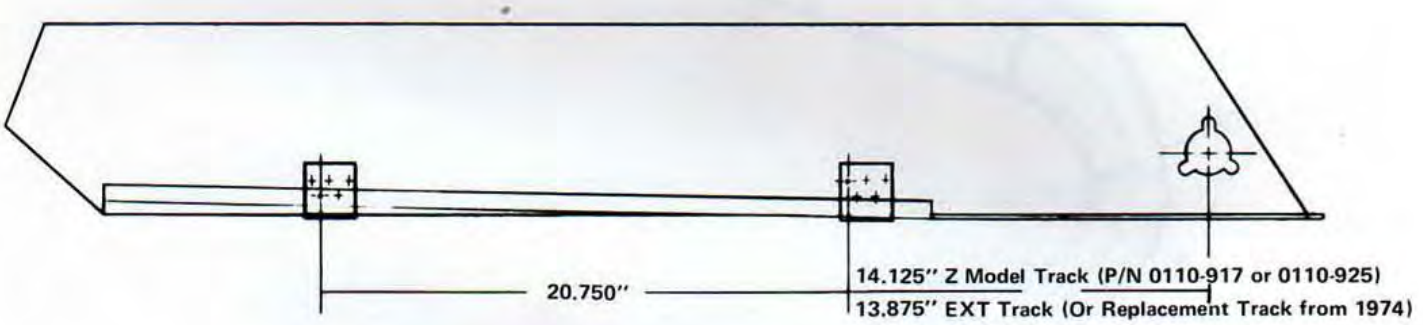

Fig. 5

MOUNTING LOCATIONS FOR 1972 EXT

The 1972 EXT is longer in track length and it is cleat driven. To change this model, a complete change must be made. You will need:

1. New Track – Standard – P/N 0110-917
   Aluminum – P/N 0110-925
2. New Suspension Kit – P/N 0134-934
3. New Driven Shaft – Steel – P/N 0110-918
4. New Sprockets, Top and Bottom and Chain
5. New Dropcase – P/N 0107-343
6. New Cover – P/N 0107-213
7. Seal – P/N 0107-214

Now you must look at page 90 to see the dimension given for mounting the plates in the tunnel. Using the above parts mentioned, use the 14.125" from the center of the drive shaft to the rear mounting hole of the mounting plate, then measure 20.750" to the rear hole of the back mounting plate.

As we have mentioned before, trial and error set-up will be your judgment on what you decide on for a workable suspension. None of the above is suggested to mean that this is a change that must be made to update your 1972 EXT. It is your decision to update and is intended as information to change for an experiment to help your racing needs.

MOUNTING LOCATIONS FOR 1973 EXT

The new 1975 Z model track is (111") long as is your 1973 EXT (111") long. The track still is very much different but, using your same track, you may install the new suspension. This is also the case on all our racing tracks offered last year for the EXT. By following the dimensions shown for EXT track and using the parts suggested, you can change your 1973 EXT track.

See Fig. 5.

Parts suggested: Suspension Kit (4 new mounting plates, Part No. 0116-715, will be included in kit.) All racing parts available for 1975 Z model may be used, such as shafts, tracks, etc.

MOUNTING LOCATION FOR 1973 & 1974 EL TIGRE

The 1975 Z model El Tigre suspension differences on page 90 may imply to you that a great deal of changes must be made to use this new suspension on your older model sled. For racing, a suspension change can be made, but it requires many new parts for changing your 1973 or 1974 El Tigre just for trail riding. This change is not recommended. The following parts are needed to change suspension for racing.

See Fig. 6 for standard track use.

1 New Track – Aluminum – P/N 0110-925

- or -

1 New Track – Standard – P/N 0110-917

1 New Suspension Kit – P/N 0134-934

1 Drive Shaft Assembly – P/N 0110-918

Follow the dimensions given on page 90 for the 1973 EXT, as they are the same as you need for your 1973 or 1974 El Tigre employing the parts suggested above.

See Fig. 5 for change to new Z track.

None of the above is a change that **must** be made, it is intended to inform you as to what you will need if you attempt a change. Final set-up will be your responsibility.

INSTALLATION OF NEW Z FRAME IN STANDARD EL TIGRE CHASSIS FOR USE WITH STANDARD TRACK 0110-924

Front Arm (1) Move original plate back 2-1/4" and use top hole in plate.

Back Arm (2) Move original plate forward 1.861" from existing position or leave as is and measure from back hole and drill new hole 1.861" from center of existing back hole. This should put you in front of the two existing holes (see illustration).

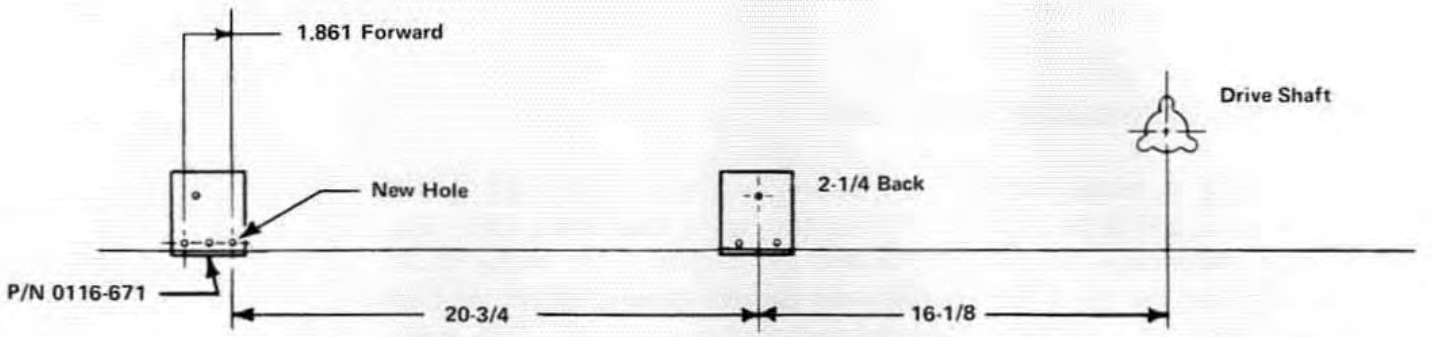

Fig. 6

After plates are moved or new hole is drilled, the top hole to drive shaft center should be 16-1/8", and 20-3/4" from center top hole front, to center new hole in back plate. This procedure is correct in measurements, but we do not recommend good or bad results. It is unknown how this new suspension will react in an older model or standard model El Tigre. This information is for those people who want to try this with no guarantee on the after effects. Remember, this suspension was not intended to be used on this model.

HELPFUL INFORMATION FOR UPDATING EARLIER MODELS

1. Some Arctic Cat distributors have available alternate race tracks from the 1974 race program. These optional tracks will not be sold through Arctic Enterprises. See the 1974 "To Be Competitive" manual for this information and installation.

2. The 1975 Z model El Tigre suspension may be purchased through standard ordering. If this is installed in an earlier model, see pages 90 to 92 for location for mounting and parts needed.

3. All 1974 racing accessories for updating older models that are not included in the 1975 racing manual are no longer available through Arctic Enterprises. Some distributors may have some of these items.

4. For the 1972 EXT, there are no mod kits for the T1A 400 R2 or T1A 440 R2, but both of them can be changed to T1C 340's with the new mod kit for 1974. Models T3A 440 R2 and T3A 650 R2 have no mod kits available at all.

5. All 1975 models of our El Tigre's have air bleed type carburetors. If these are used, the air bleed holes must be closed off on the VM 36 and VM 38 carburetors. All others must be relocated. Older models should only use 1974 carburetors.

6. When racing under USSA 1975 Rules with our 1973 Formula II, there is a weight limit for each cc in mod stock and super stock – 250cc, 260 lbs.; 340cc, 280 lbs.; 440cc, 310 lbs.; 650cc, 340 lbs.

7. On page 81, CD ignition change for the 1972 EXT may be used to update your 1972 EXT to have CD ignition. Note the advance running timing change in this unit is installed, see page 78.

8. If you should adapt the new 1975 mod kit on an older model sled, a good starting point to remember for clutch setup would be as follows.

Ramp	Weight	Sprocket	Chain Pitch
250 – 0146-230	146-108	15-39	68
340 – 0146-230	146-176	18-39	70
440 – 0146-231	146-106	19-39	70

9. It has been noted on all older models that when the plastic liner on spacer that is between the ski spring and saddle tends to wear to a point that the ski wobbles or turns, giving the carbide runners a roll over effect. By keeping the ski as study as possible, it will let you have full use of your carbide runners.

10. When drive clutches are repaired or rebuilt, use the same stationary sheave whenever possible. The hex shaft will be polished in use and give increased bearing rise, but it should also be balanced. It is advisable to run balanced drive and driven clutches. As RPM's increase, belt efficiency decreases. Balanced clutches will help to sustain good belt efficiency.

ARCTIC CAT RACING ACCESSORIES

Arctic Part No.	Description
0110-852	Track Assy. – Special Internal Drive with Molded Inserts and Rubber Tread for '73 and '74 El Tigre
0103-045	Carbide Skags – Stock '73 EXT
0134-939	Arctic Super Studs – Carbide Tipped – 20/Pkg. – Small
0134-898	Arctic Super Studs – Carbide Tipped – 20/Pkg. – Large
0134-859	Arctic Claw Ice Studs – 48/Pkg.
0134-912	Arctic Super Claw Ice Studs – 24/Pkg.
0134-921	Carbide Skags – "Z" and El Tigre Design
0134-897	Carbide Insert Kit – with Silver Solder and Flux
0134-934	"Z" Skid Frame Kit – Less Track and Drive Sprockets for '73 EXT and All El Tigres
0144-103	Gear Reduction Puller – '73 EXT
0168-805 to 823	Arctic Helmets
0168-260 to 273	Tiger Suits
0168-274 to 286	Tiger Pants
0168-630 to 637	Racing Boots
0168-738 to 744	Aristocrat Gloves
0169-480 to 481	Arctic Socks
0168-489 to 492	Arctic Face Mask
0134-807	Fiberglass Repair Kit
0134-758 and 760	Speedometers
0134-761 and 860	Tachometers
0134-915	Heat Gauges
0134-746 and 656	EXT Cover
0134-780	El Tigre Cover '74
0134-932	"Z" Cover '75
0134-906	Reg. El Tigre Cover '75
0102-176	Center Belt
0102-177	Outer Belt

FILL THIS CARD OUT COMPLETELY AND RETURN IMMEDIATELY TO GET ON THE MAILING LIST FOR "Z RACING NEWS"

Arctic Enterprises will be publishing a regular newspaper during the season containing news, new information and updates to the Arctic Cat Competition Manual. The mailing list will be made up from the Return Cards enclosed in the Manuals, SO DON'T MISS OUT! MAIL THE CARD NOW!